500 EXC 2012

SPARE PARTS MANUAL: ENGINE

ART.NO.: 3CM089550LEN

ENGLISH

INDEX

ENGINE CASE

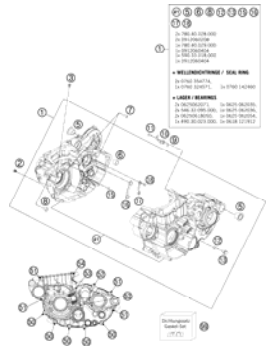

3

CLUTCH COVER

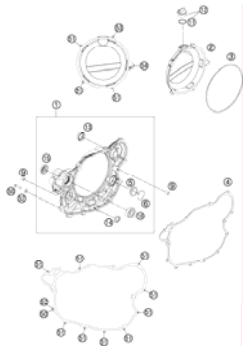

4

BALANCER SHAFT

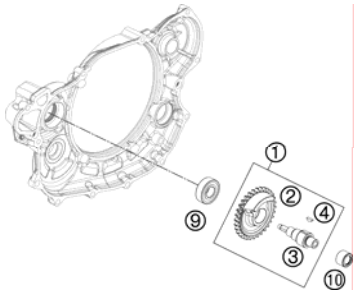

5

CYLINDER

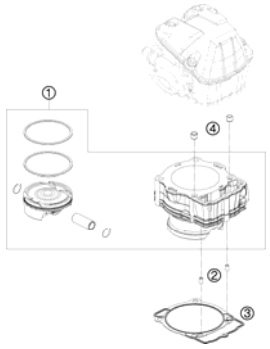

6

CRANKSHAFT, PISTON

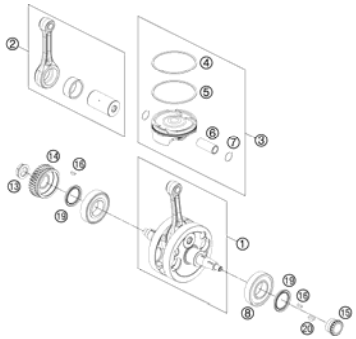

7

CLUTCH

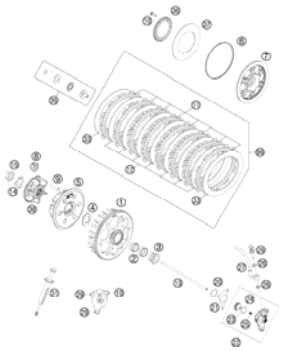

8

TRANSMISSION I - MAIN SHAFT

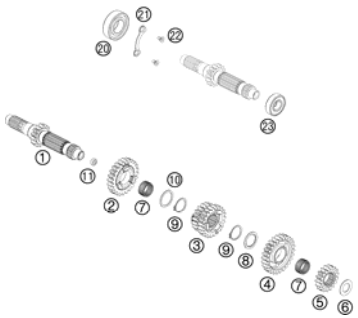

9

TRANSMISSION II - COUNTERSHAFT

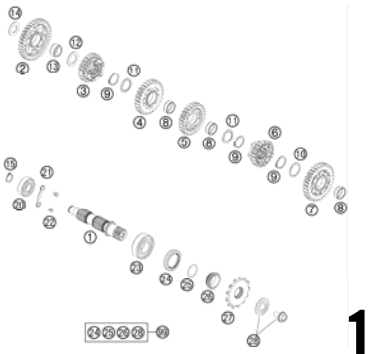

10

KICK STARTER

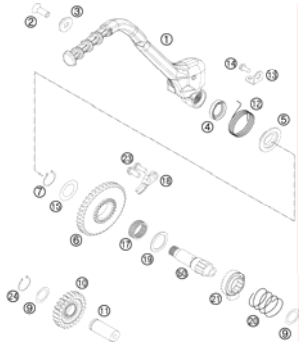

11

SHIFTING MECHANISM

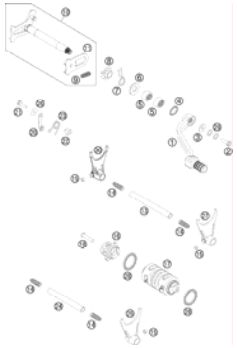

12

WATER PUMP

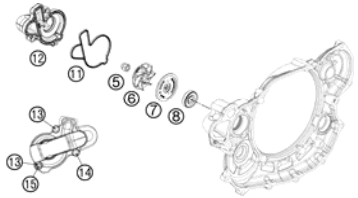

13

COOLING SYSTEM

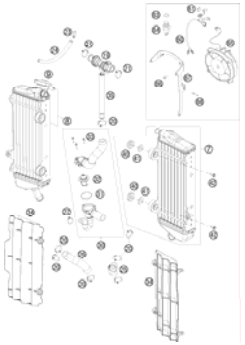

14

INDEX

VALVE DRIVE

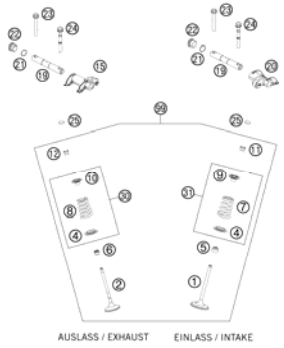

15

TIMING DRIVE

17

CYLINDER HEAD

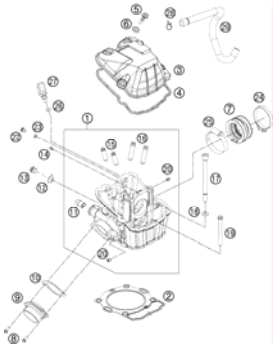

18

LUBRICATING SYSTEM

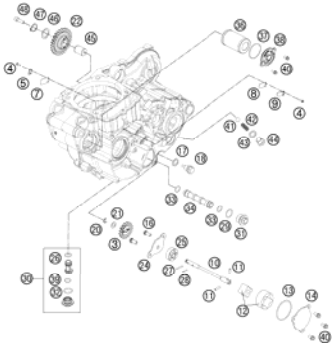

19

IGNITION SYSTEM

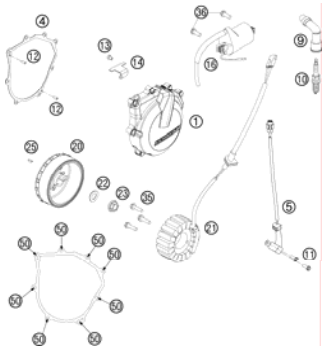

21

ELECTRIC STARTER

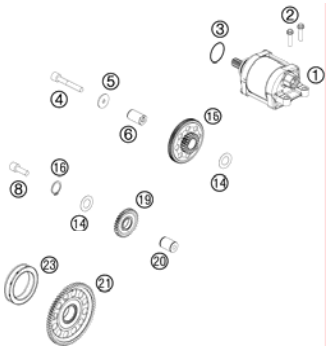

22

THROTTLE BODY

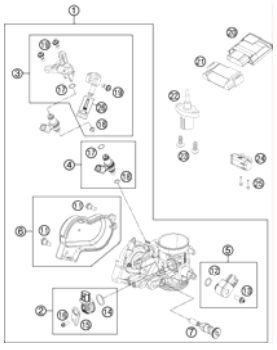

23

All information contained is without obligation. KTM-Sportmotorcycle AG particularly reserves the right to modify any equipment, technical specifications, prices, colors, shapes, materials, services, service work, constructions, equipment and the like so as to adapt them to local conditions or to cancel any of the above items, all without previous announcement and without giving reasons. KTM may stop manufacturing certain models without previous notice. KTM shall not be held liable for any deviations of availability and/or ability to deliver, illustrations, descriptions, printing and/or other errors. The illustrated models partly contain extra equipment, which is not applied to standard models.
© by KTM-SPORTMOTORCYCLE AG, Mattighofen AUSTRIA; All rights reserved; Reprint, also in extracts, with written allowance of KTM-SPORTMOTORCYCLE AG, Mattighofen only.

ENGINE CASE

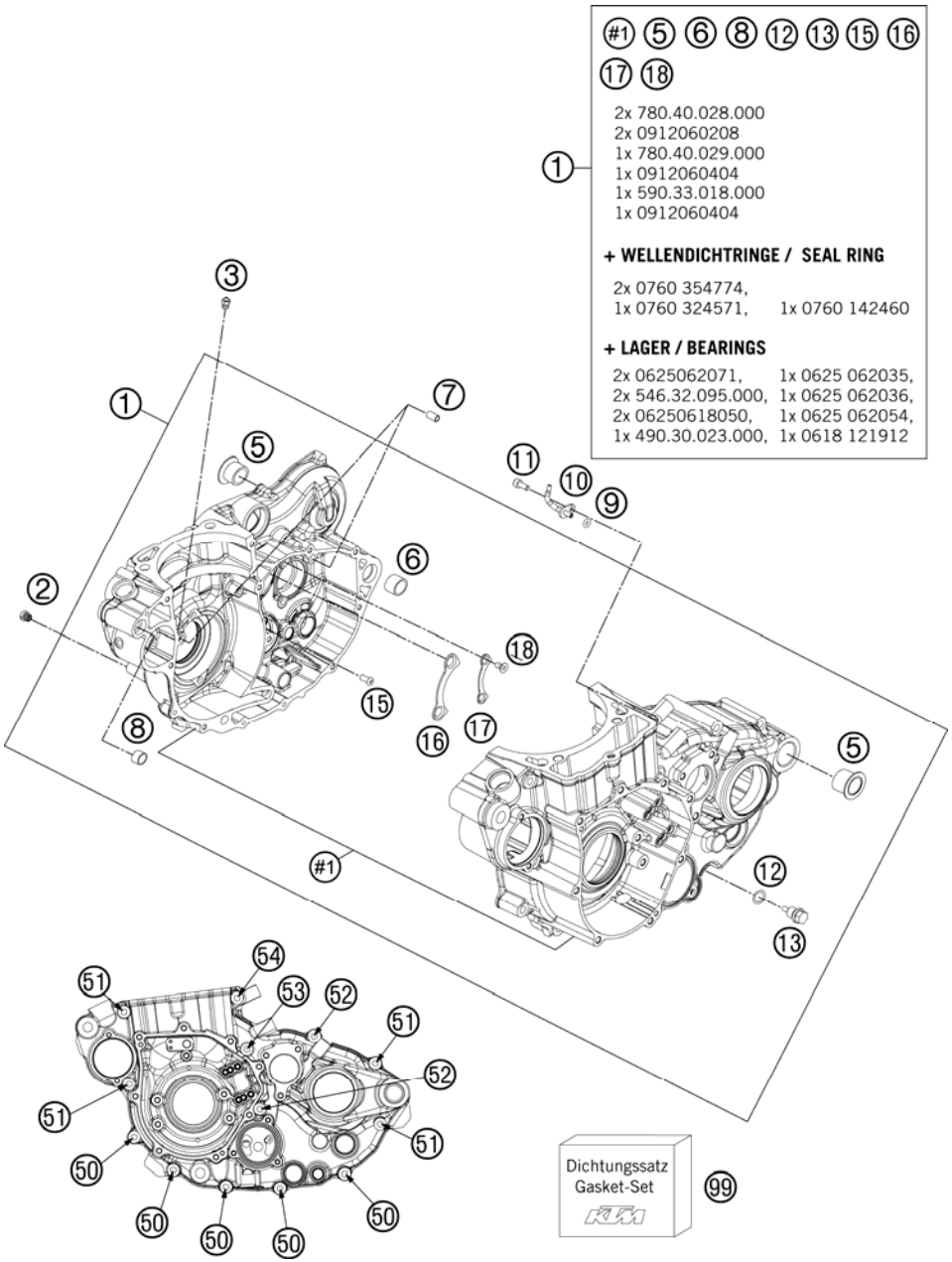

FIG	PART NUMBER	DESCRIPTION	QTY
1	78130000033	ENGINE CASE CPL.	1
2	57031523145	MAIN JET 145	1
3	60030063070	OIL JET 70 M5	1
5	75030010100	CASE BUSH	2
6	54830027000	DOWEL 21X12 03	1
7	59030023000	DOWEL 6X8X11,5	2
8	51030026100	DOWEL 17 X 13 X 12	1
9	0770035020	O-RING 3,5X2,00 NBR	1
10	81230064000	OIL JET ANGLED 70	1
11	0912040103	AH.SCREW DIN0912-M 4X10	1
12	58038022000	CU-SEAL RING DIN7603-12X18X1,5	1
13	58030021000	OILDRAIN PLUG W.MAG. M 12X1,5	1
15	0018050103	INT. TORX OVAL HEAD M 5X10 8.8	1
16	78033032000	TAB WASHER BEARING MAIN SHAFT	1
17	78033132000	TAB WASHER BEARING COUNT.SHAFT	1
18	0019050106	INT. TORX FLAT HEAD M5X10 10.9	4
50	0025060406	HH COLLAR SCREW M6X40 TX30	5
51	0025060606	HH COLLAR SCREW M6X60 TX30	4
52	0025060756	HH COLLAR SCREW M6X75 TX30	2
53	0025060806	HH COLLAR SCREW M6X80 TX30	1
54	0025060856	HH COLLAR SCREW M6X85 TX30	1
99	78030099000	GASKET SET 450/530 EXC 08	1

127813010 / C127813010

* NEW PART

X AS REQUIRED

CLUTCH COVER

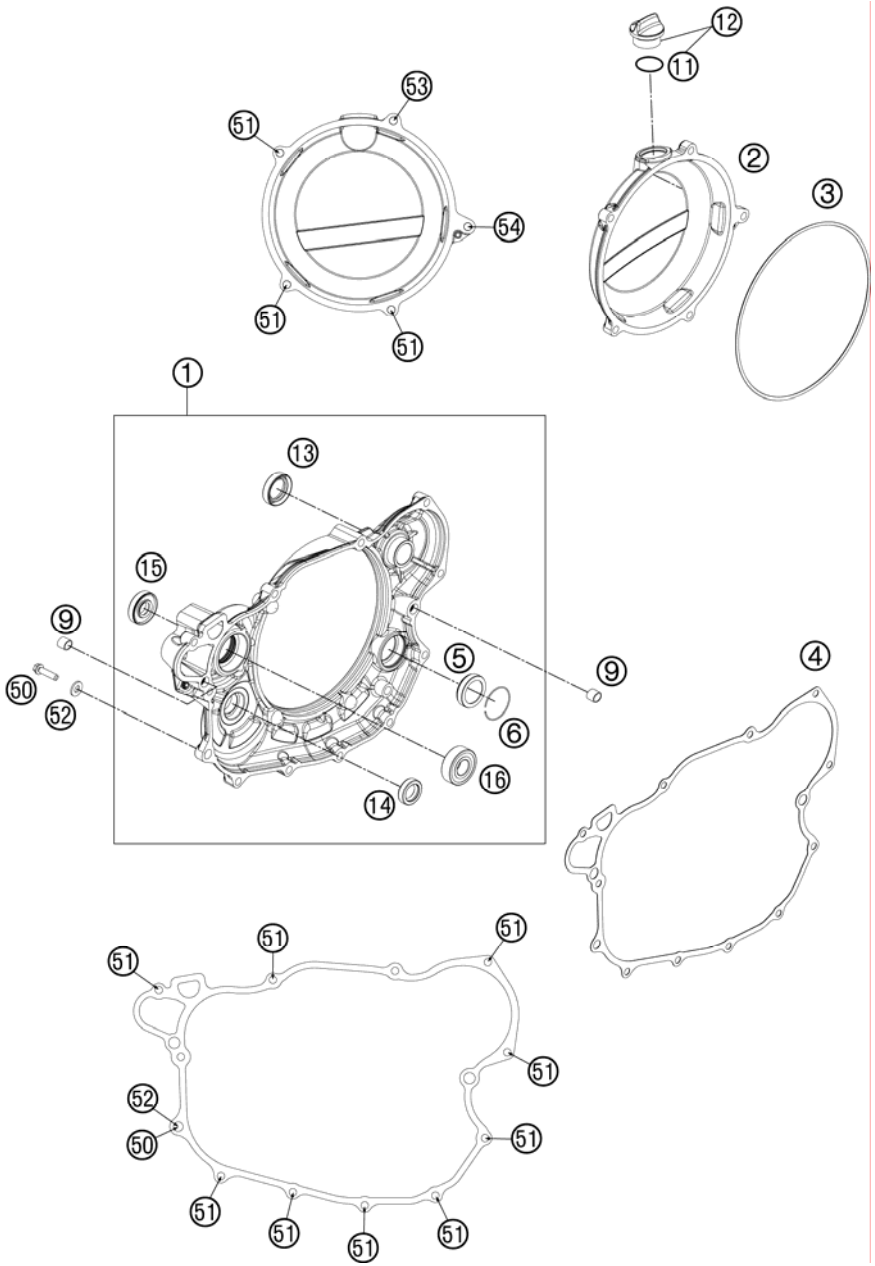

FIG	PART NUMBER	DESCRIPTION	QTY
1	78130001044	CLUTCH COVER CPL.	1
2	7813002600015	CLUTCH COVER OUTSIDE	1
3	78130027000	GASKET - CLUTCH OUTER COVER	1
4	78130025000	CLUTCH COVER GASKET	1
5	78030095100	OIL LEVEL GLASS VITON	1
6	61030019050	CIRCLIP OIL LEVEL GLASS 03	1
9	49030090000	DOWEL 9,8 X 7 X 10	2
11	0770191015	O-RING 19,00X3,00 NBR	1
12	58030120000	OIL FILLER CAP M24x3 WITH O-R	1
13	0760193070	SHAFT SEAL RING 19X30X7 B	1
14	0760142460	SHAFT SEAL RING 14X24X6 B	1
15	0760123073	SHAFT SEAL RING 12X30X7 PTFE	1
16	0625062022	BALL BEARING 6202 C0 2	1
50	78030080000	LOCATING SCREW	1
51	0025060256	HH COLLAR SCREW M6X25 TX30	12
52	58030081000	CU-SEAL RING 8 X 14 X 3	1
53	0025060556	HH COLLAR SCREW M6X55 TX30	1
54	0025060606	HH COLLAR SCREW M6X60 TX30	1

127813020 / C127813020

* NEW PART

X AS REQUIRED

BALANCER SHAFT

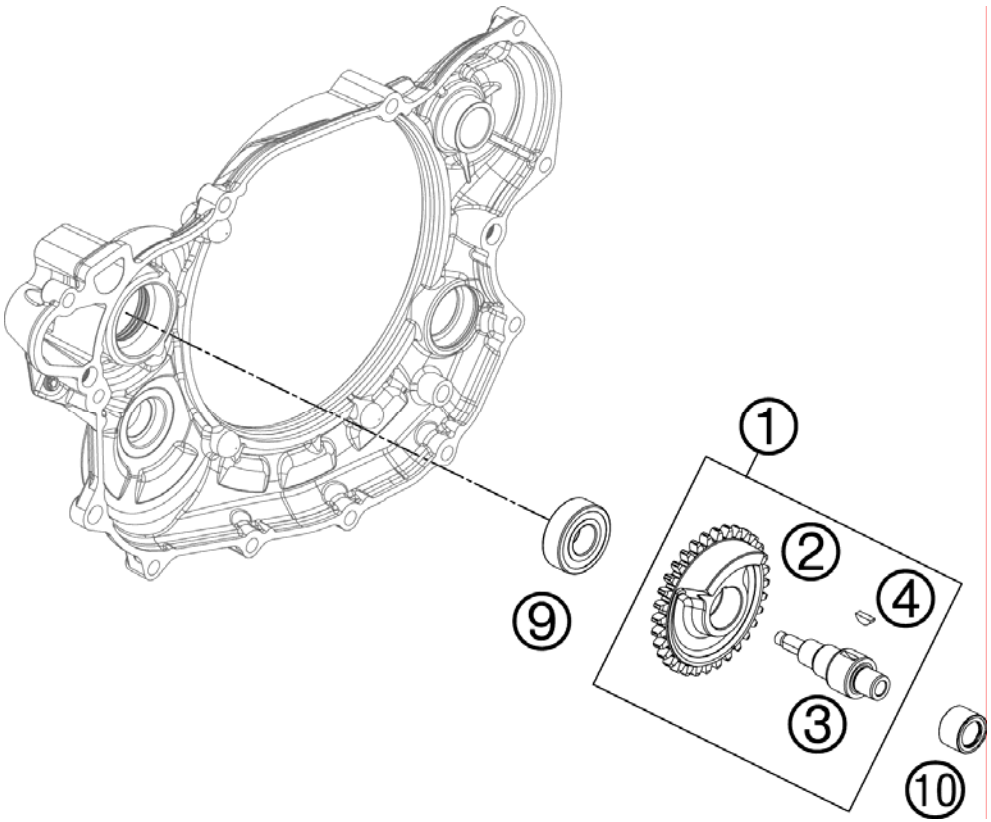

FIG	PART NUMBER	DESCRIPTION	QTY
1	78130056000	BALANCE SHAFT	1
2	78130056032	BALANCE SHAFT GEAR	1
3	78130056001	BALANCE SHAFT	1
4	0888030037	WOODRUFF KEY DIN6888-3X3,7	1
9	0625062022	BALL BEARING 6202 C0 2	1
10	0618121912	NEEDLE BUSH NK1212	1

127813030 / C127813030

* NEW PART

X AS REQUIRED

CYLINDER

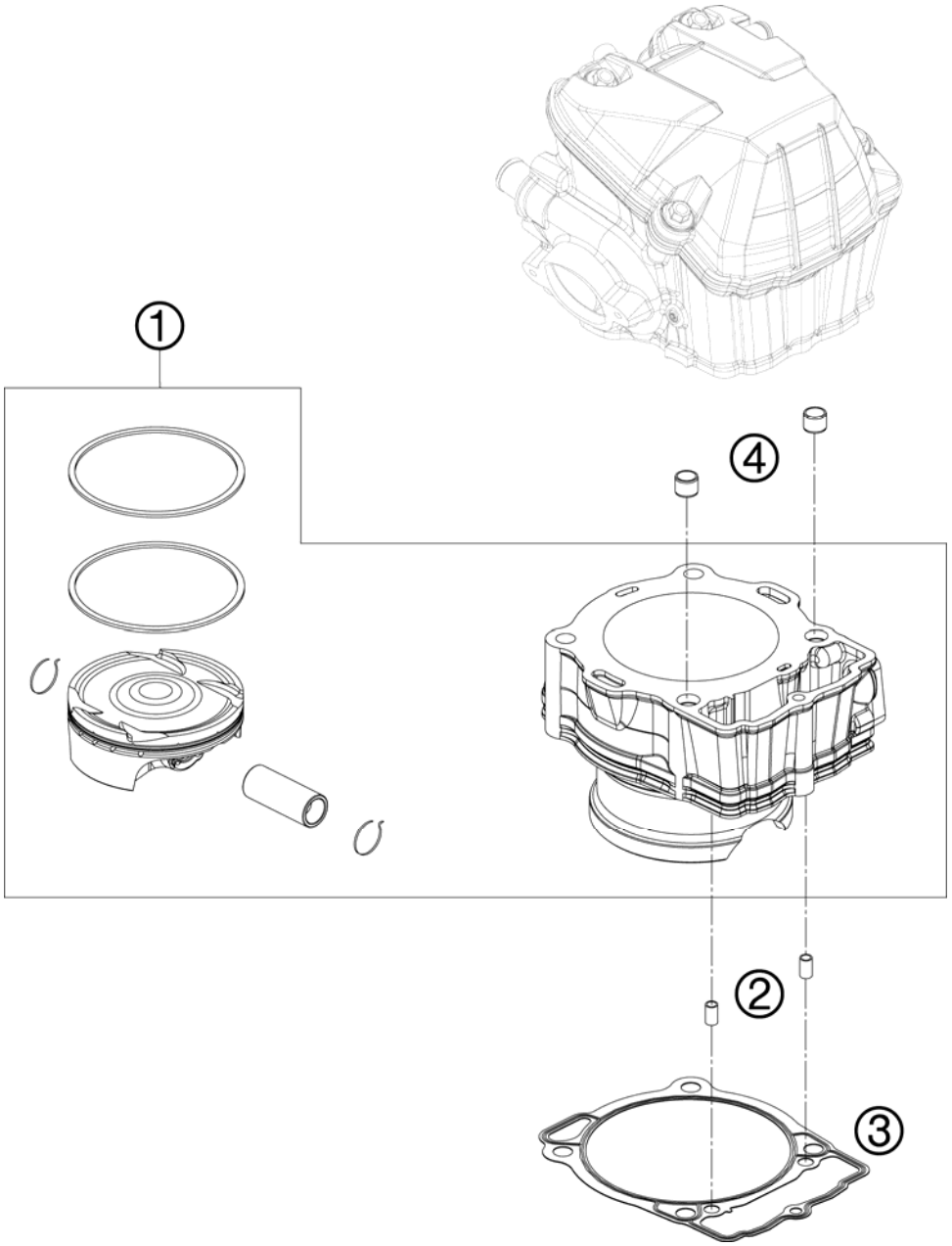

FIG	PART NUMBER	DESCRIPTION		QTY
1	78730038000	CYLINDER + PISTON	12	1
2	59030023000	DOWEL 6X8X11,5		2
3	78030035000	CYLINDER BASE GASKET		1
4	58530014000	DOWEL 10,2X12,5X10	2001	2

127873040 / C127873040

* NEW PART

X AS REQUIRED

CRANKSHAFT, PISTON

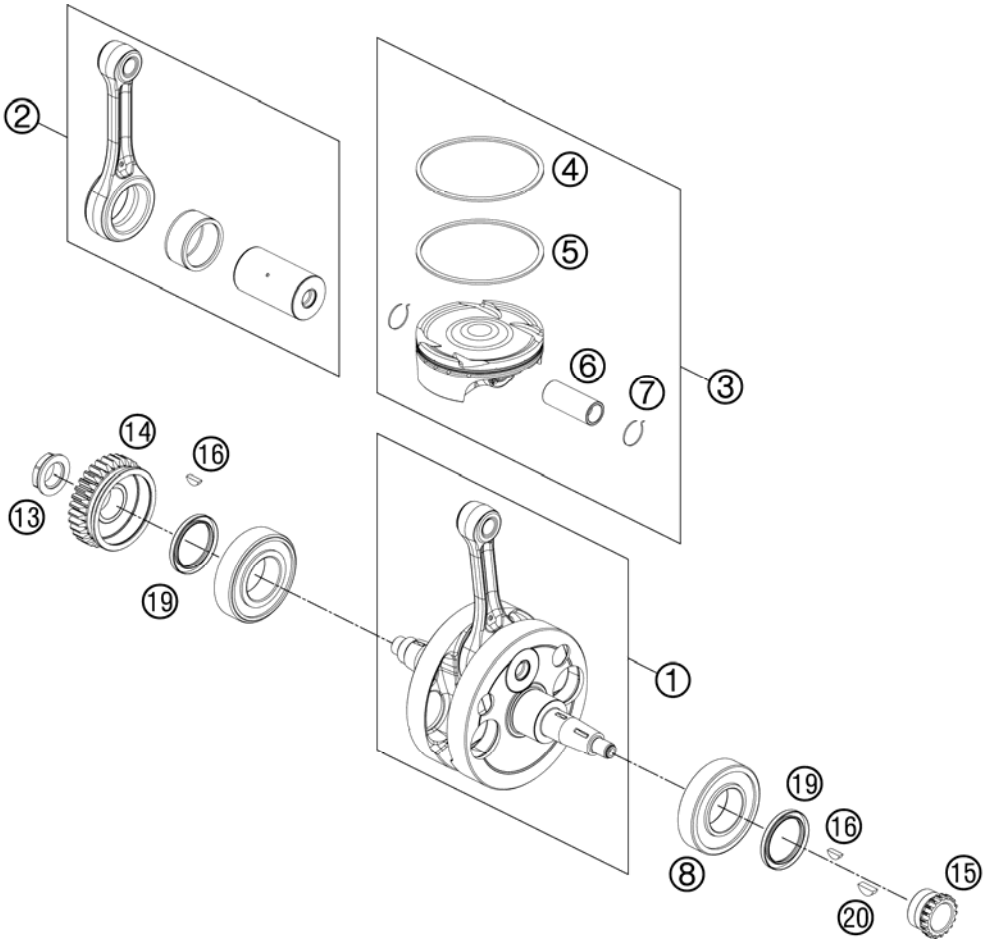

FIG	PART NUMBER	DESCRIPTION	QTY
1	78730018000	CRANKSHAFT CPL.	1
2	78730015044	CON. ROD. REP. KIT	1
3	78730007000 I	PISTON I D=95MM	1
3	78730007000 II	PISTON II D=95MM	1
4	78130030000	COMPRESSION RING	1
5	78130032000	OIL SCRAPER RING	1
6	78130033000	PISTON PIN	1
7	77330074000	CIRCLIP	2
8	0625062071	BALL BEARING 6207 TM-SX07E 39	2
13	78030029200	NUT PRIMARY WHEEL M20X1,5	1
14	78132000032	PRIMARY GEAR	1
15	78036014200	TIMING GEAR 18T.	1
16	0888030037	WOODRUFF KEY DIN6888-3X3,7	2
19	0760354774	SHAFT SEAL RING 35X47X7 VITON	2
20	0888030050	WOODRUFF KEY DIN6888-3X5X13	1

127873060 / C127873060

* NEW PART

X AS REQUIRED

CLUTCH

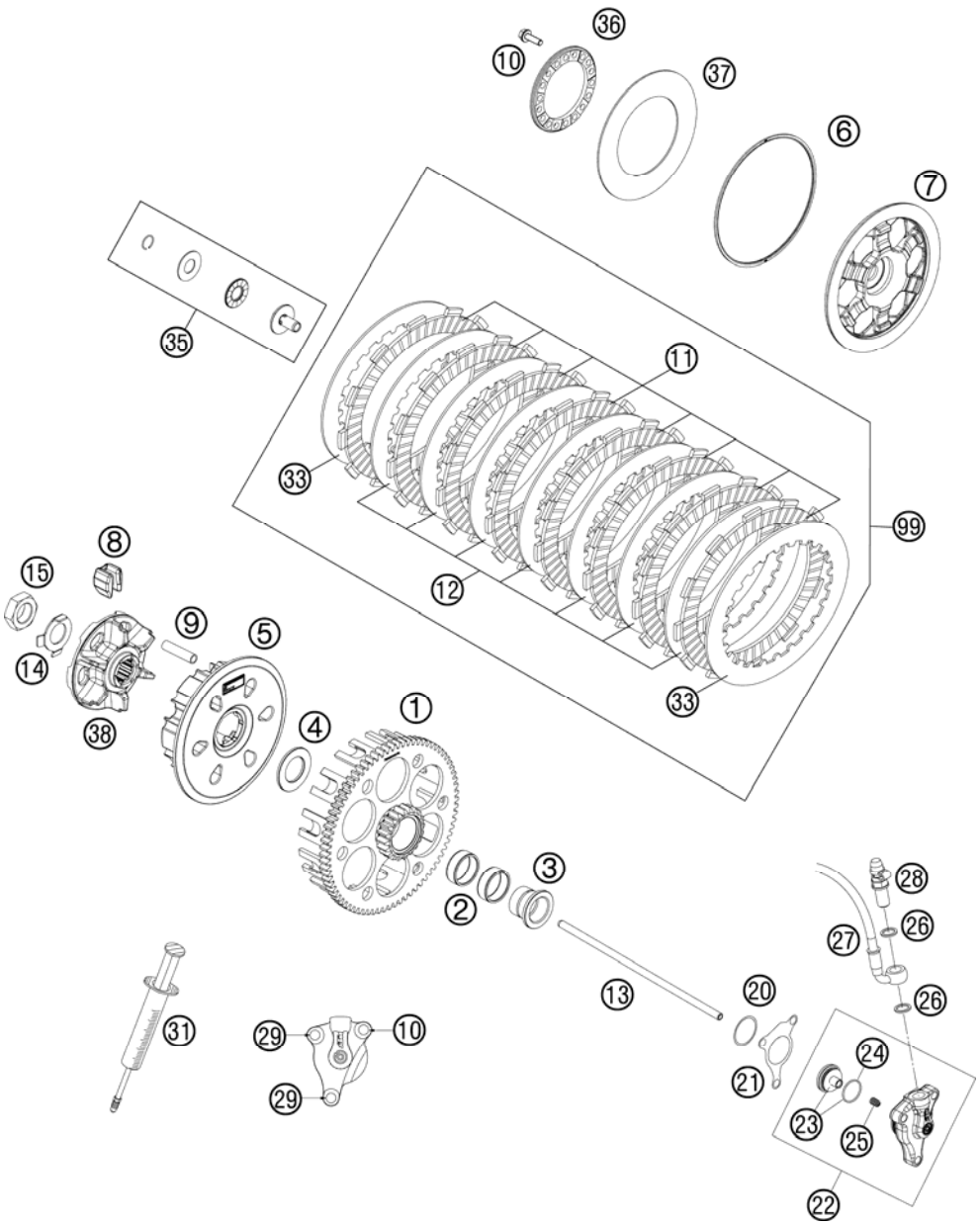

FIG	PART NUMBER	DESCRIPTION	QTY
1	78132001076	CLUTCH CAGE	1
2	0405252910	NEEDLE BEAR K 25X29X10	2
3	78132015100	COLLARSLEEVE	1
4	77232009100	WASHER 21,8 X 37 X 3	1
5	78132002008	INNER CLUTCH HUB	1
6	78132013000	WASHER 112X118X1.5	1
7	78132003000	PRESSURE PLATE	1
8	78132025100	DAMPING RUBBER	6
9	78132004000	SLEEVE 7,5X33.4	6
10	0025050166	HH COLLAR SCREW M5X16 TX30	6
11	59032011100	LINING DISC 2MM 04	8
12	59032010200	INTERMEDIATE DISC 1,4MM 2002	7
13	78132054100	PUSH ROD	1
14	78132018000	TAB WASHER	1
15	0936181505	HEXAGON NUT DIN0936-M18X1,5 R.	1
20	0770300015	O-RING 30,00X1,50 NBR 70	1
21	59032065000	GASKET FOR SLAVE CYLINDER	1
22	54832061044	OUTPUT CYLINDER CPL. 06	1
23	54832066000	PISTON CPL.	1
24	54832067000	O-RING	1
25	54832069000	PRESSURE SPRING	1
26	0603100141	COPPER GASKET DIN7603-10X14X1	2
27	78132063000	CLUTCH PIPE	1
28	62513020000	BLEEDER SCREW CPL. 05	1
29	0025060206	HH COLLAR SCREW M6X20 TX30	2
31	50329050000	VENT INJEKTION HYDR. CLUTCH	1
33	59032010100	INTERMEDIATE DISC 1MM 2002	2
35	78132057044	PRESSURE PIECE CPL.	1
36	78132006100	SPRING RING	1
37	78132005000	BELLEVILLE SPRING 71X115X1,5 I	1
38	78132002111	HUB	1
99	78132010033	CLUTCH DISC PACKAGE	1

127813210 / C127813210

* NEW PART

X AS REQUIRED

TRANSMISSION I - MAIN SHAFT

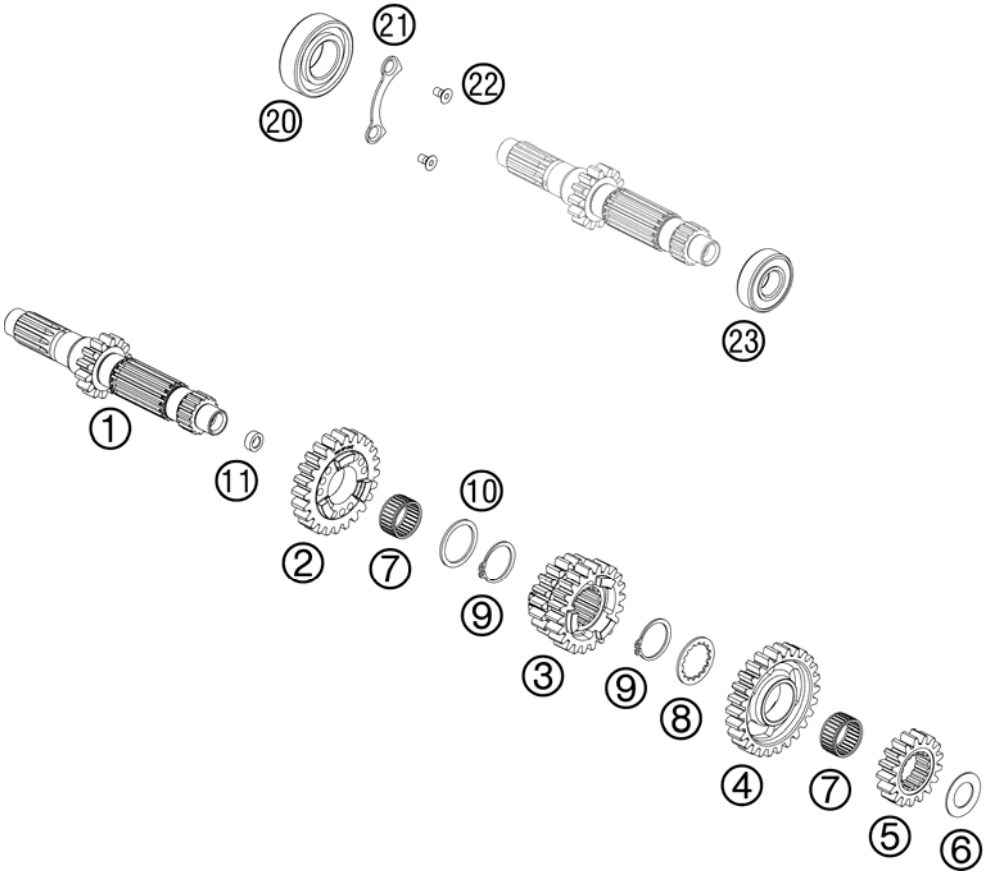

FIG	PART NUMBER	DESCRIPTION	QTY
1	78133001050	MAIN SHAFT 14 T.	1
2	78033005100	IDLER GEAR 5. GEAR	1
3	78033003000	SLIDING GEAR 3/4 G. 08	1
4	78033006100	IDLER GEAR 6. GEAR	1
5	78033002000	SOLID GEAR 2.G. 08	1
6	56033030000	STOP DISC 17,2X30X1	1
7	0405222613	NEEDLE BEAR. K 22X26X13 TN	2
8	78033033000	STOP DISK 23 X 32 X 1,5	1
9	0471250120	CIRCLIP DIN0471-25X1,2	2
10	78033031000	STOP DISK 26 X 32 X 1,5	1
11	78033001110	BUSHING	1
20	0625062054	BALL BEARING 6205 C3 NTN	1
21	78033032000	TAB WASHER BEARING MAIN SHAFT	1
22	0019050103	INT. TORX FLAT HEAD M 5X10 8.8	2
23	0625062036	BALL BEARING 6203 RSH C3	1

127813330 / C127813330

* NEW PART

X AS REQUIRED

TRANSMISSION II - COUNTERSHAFT

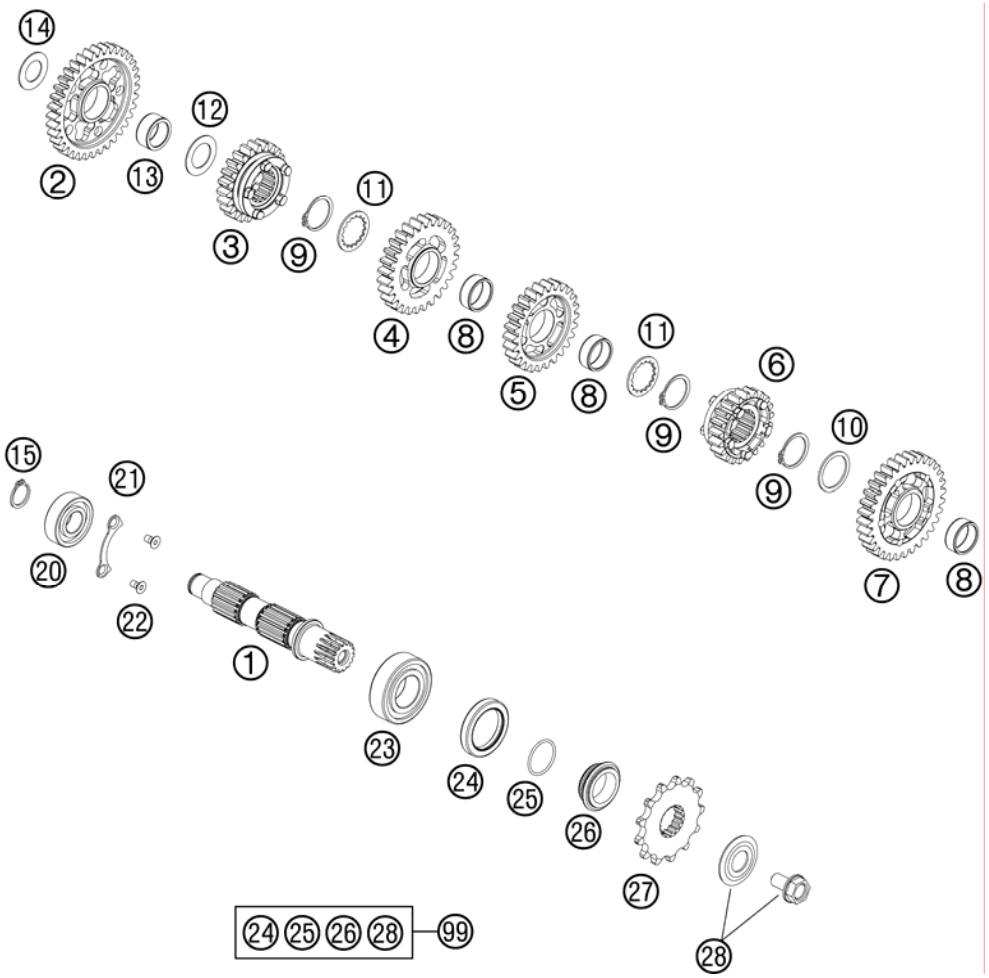

FIG	PART NUMBER	DESCRIPTION	QTY
1	78033010000	COUNTERSHAFT 08	1
2	78033011100	IDLER GEAR 1. GEAR	1
3	78033015000	SLIDING GEAR 5.G. 08	1
4	78033013000	IDLER GEAR 3.G. 08	1
5	78033014000	IDLER GEAR 4.G. 08	1
6	78033016000	SLIDING GEAR 6.G. 08	1
7	78033012100	IDLER GEAR 2. GEAR	1
8	0405222611	NEEDLE BEAR.K 22X26X10 DIVIDED	3
9	0471250120	CIRCLIP DIN0471-25X1,2	3
10	78033031000	STOP DISK 26 X 32 X 1,5	1
11	78033033000	STOP DISK 23 X 32 X 1,5	2
12	59033080000	SHIM 20X32X1	1
13	0405202612	NEEDLE BEARING K 20X26X12	1
14	56033030000	STOP DISC 17,2X30X1	1
15	0471170015	CIRCLIP DIN 0471-17X1, 5	1
20	0625062035	BALL BEARING 6203 JR2 C3	1
21	78033132000	TAB WASHER BEARING COUNT.SHAFT	1
22	0019050106	INT. TORX FLAT HEAD M5X10 10.9	2
23	49030023000	CYL.ROLL BEARING NJ205	1
24	0760324571	SHAFT SEAL RING 32X45X7 BSLNBR	1
25	0770020220	O-RING 25,12X1,78 NBR70	1
26	78133014000	SPACER SLEEVE COUNTER	1
27	50033029013	FRONT SPROCKET 13-T	x
27	50033029014	FRONT SPROCKET 14-T	x
27	50033029015	FRONT SPROCKET 15-T	x
28	59033034044	SCREW 10.9+SPRING WASHER	1
99	00050000941	COUNTER SHAFT REP.KIT 4 STROKE	x

127813360 / C127813360

* NEW PART

X AS REQUIRED

KICK STARTER

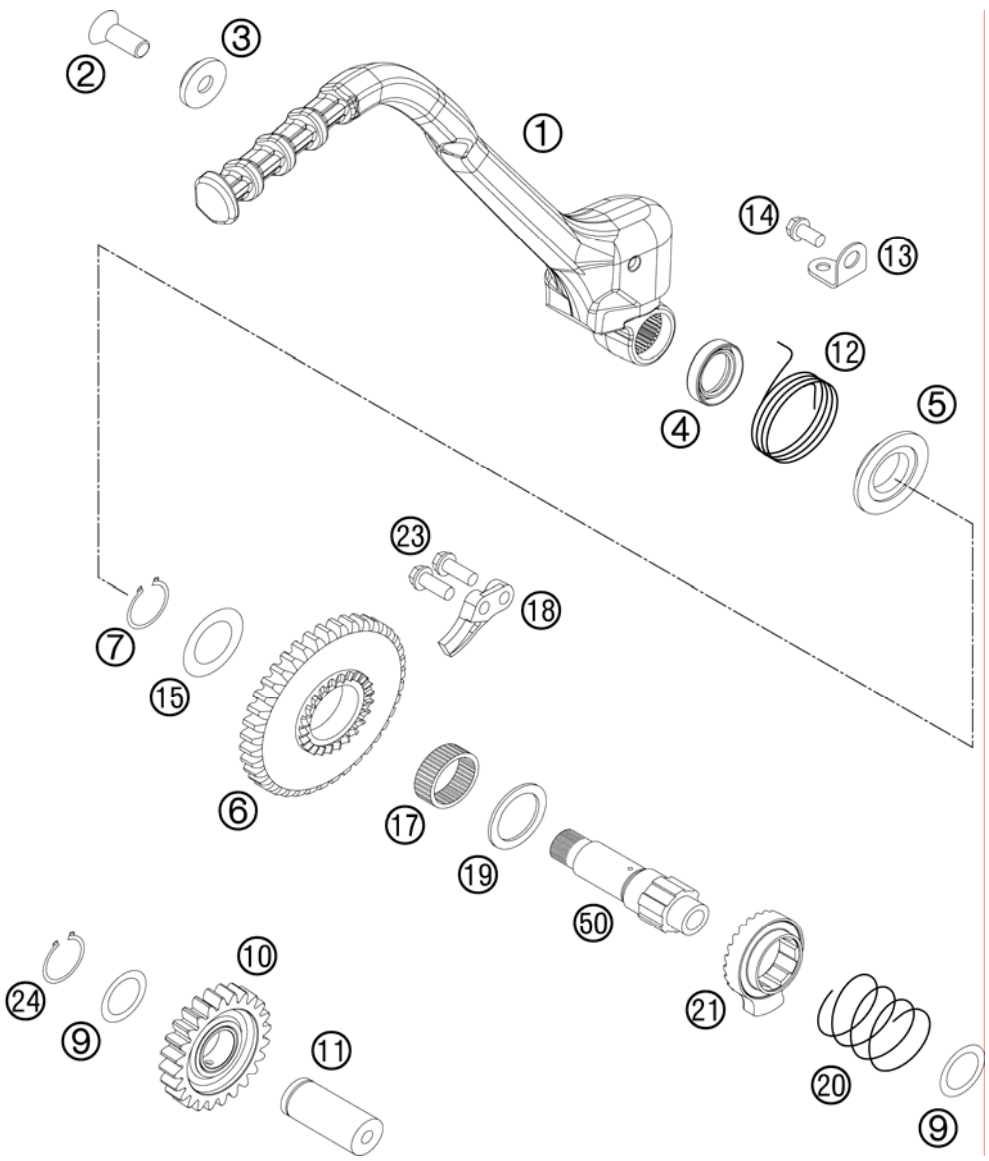

FIG	PART NUMBER	DESCRIPTION	QTY
1	77133070144	KICKSTARTER CPL.	1
2	0019080206S	FLAT HEAD SCREW M. ISA45 M8X20	1
3	54633037000	WASHER 8MM GALVANIZED	1
4	0760193070	SHAFT SEAL RING 19X30X7 B	1
5	59033055000	DRIVING HUB	1
6	59033051039	KICKSTARTER GEAR 39-T	1
7	0471190120	CIRCLIP DIN0471-19X1,2	1
9	0988172405	SHIM WASHER DIN0988-17X24X0,5	2
10	78033053200	IDLER GEAR CPL.	1
11	59033018000	BUSHING PIN 2000	1
12	59033054000	KICKSTARTER SPRING	1
13	78033074000	SPRINGHOLDER 08	1
14	0912060123	AH SCREW DIN0912-M 6X12	1
15	59033080000	SHIM 20X32X1	1
17	0405222610	% NEEDLE BEARING K 22X26X10 A	1
18	59033069000	BUMP PART	1
19	58033031000	STOP DISK 22,2 X 30 X 1,5	1
20	58033028000	RATCHET GEAR SPRING 1,2 MM	1
21	78033052000	RATCHET GEAR KICK STARTER	1
23	0025060206	HH COLLAR SCREW M6X20 TX30	2
24	0471170010	CIRCLIP DIN0471-17X1	1
50	59033050100	KICKSTARTER SHAFT	1

127813390 / C127813390

* NEW PART

X AS REQUIRED

SHIFTING MECHANISM

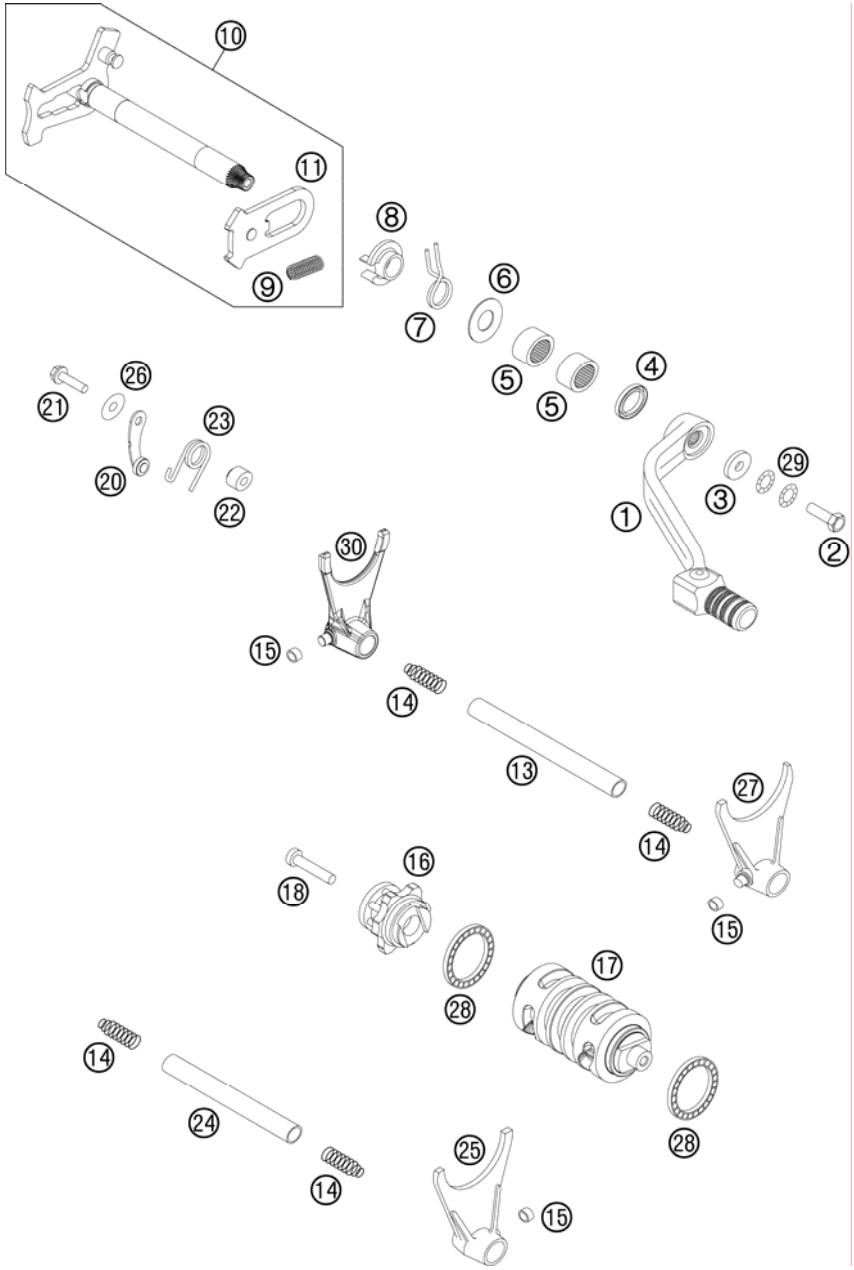

FIG	PART NUMBER	DESCRIPTION	QTY
1	59034031000	SHIFT LEVER CPL.RACING 2000	1
2	59009062016	SPECIAL SCREW M6X16 WS=8 10.9	1
3	50232050001	STEEL WASHER 6,4X17X3	1
4	0760142460	SHAFT SEAL RING 14X24X6 B	1
5	54632095000	NEEDLE BEAR.HK 1412 14X20X12	2
6	54634050000	STOP DISK 14X30X1	1
7	54634014100	RETURN SPRING 2,2MM '95	1
8	54634020000	SPRING GUIDE	1
9	56534013100	TENSIONING SPRING 0,8MM	1
10	78034005044	SHIFT SHAFT CPL.	1
11	54634008044	SLIDING PLATE CPL.	1
13	78034020000	SHIFT RAIL 11,8X101,5	1
14	58038023200	PRESSURE SPRING 0,9MM	4
15	50334018100	SHIFTING ROLLER 6X8X5,2	3
16	78134015044	SHIFT DRUM LOCATING ALU CPL.	1
17	78034012000	SHIFT ROLLER	1
18	0012060303	AH SCREW DIN6912 M6X30 8.8	1
20	78134024044	LOCKING LEVER CPL.	1
21	0025050206	HH COLLAR SCREW M5X20 TX30	1
22	54634052300	SLEEVE FOR LOCKING LEVER	1
23	60034023000	ARRESTING LEVER SPRING 03	1
24	78034019000	SHIFT RAIL 11,8X85	1
25	59034001000	SHIFT FORK 5./6.GEAR 2000	1
26	0349000050	WASHER DIN7349-5X15X2	1
27	59034002000	SHIFT FORK 2./4.GEAR 2000	1
28	0625618050	BALL BEARING 61805 C3	2
29	50233041000	PAIR OF WASHERS M 6 NORDLOCK	1
30	78034003000	SHIFTING FORK 1ST/3RD GEAR	1

127813410 / C127813410

* NEW PART

X AS REQUIRED

WATER PUMP

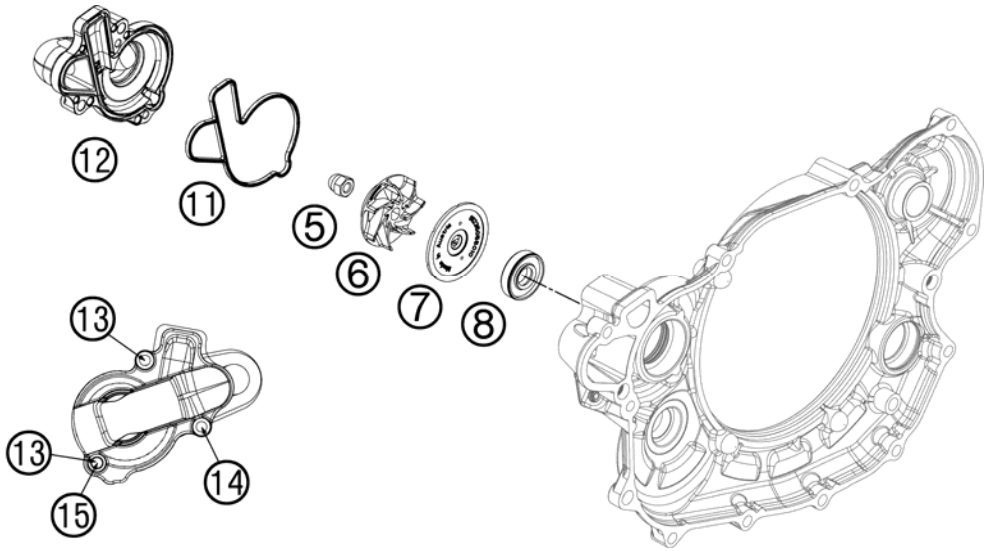

FIG	PART NUMBER	DESCRIPTION	QTY
5	61230045000	CAP NUT M6 STAINLESS STEEL	1
6	81235055020	WATER PUMP ROTOR	1
7	81235055110	DISC WATER PUMP	1
8	0760123073	SHAFT SEAL RING 12X30X7 PTFE	1
11	78135053000	WATER-PUMP GASKET	1
12	78135052000	WATER PUMP COVER CPL.	1
13	0025060256	HH COLLAR SCREW M6X25 TX30	2
14	0025060656	HH COLLAR SCREW M6X65 TX30	1
15	0603061001	CU-SEAL RING DIN7603-6X10X1	1

127813510 / C127813510

* NEW PART

X AS REQUIRED

COOLING SYSTEM

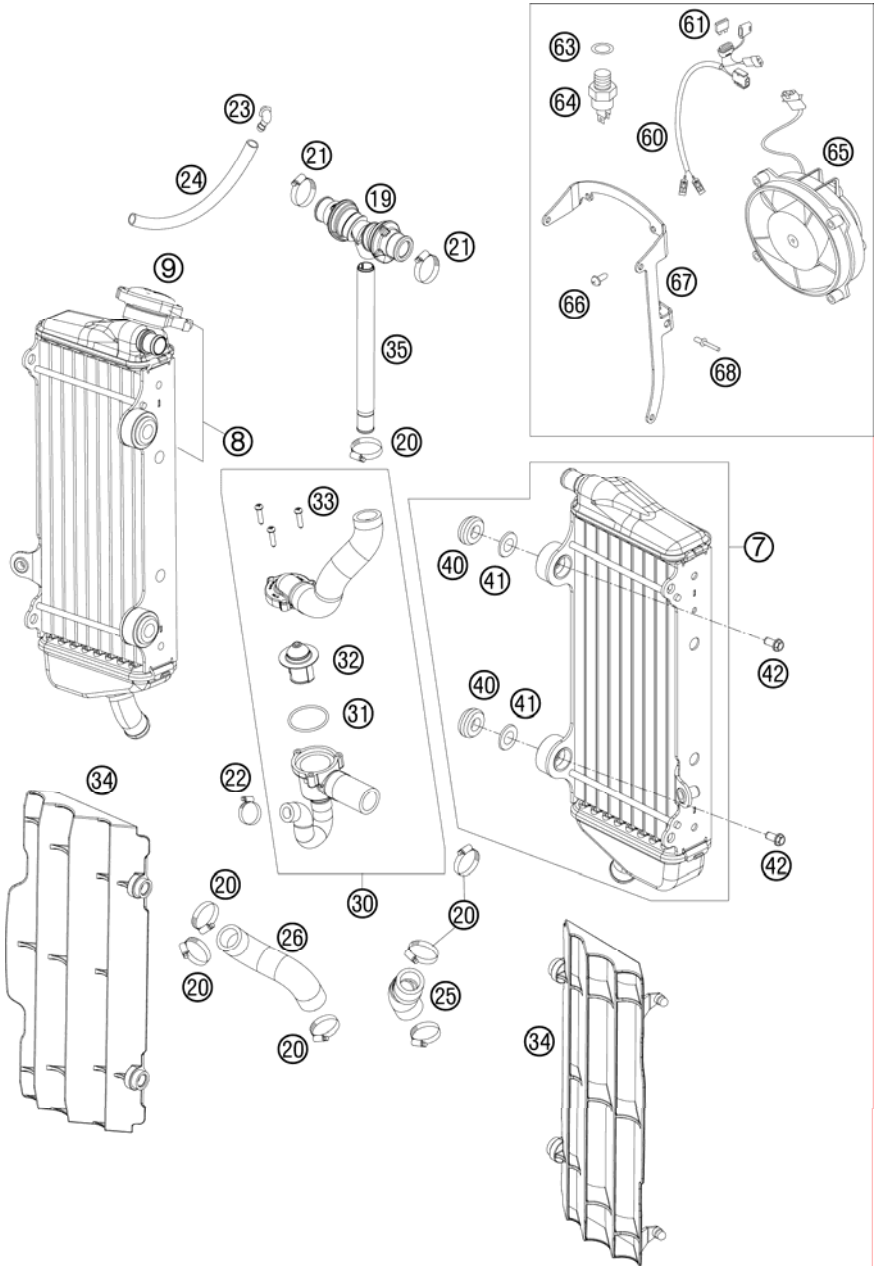

FIG	PART NUMBER	DESCRIPTION	QTY
7	77035007300	RADIATOR L/S "55623U" 12	1
8	78035008200	RADIATOR R/S "65061U" 12	1
9	77335016000	RADIATOR CAP SMALL 1,8 BAR	1
19	77235071044	Y-CONNECOTOR CPL.	1
20	10001020000	HOSE CLAMP GEMI 16-27	5
21	42013037400	HOSE CLAMP NORMA 12/24	2
22	58335099000	HOSE CLAMP GEMI 10-16	1
23	50303089000	ANGLE PIECE '97	1
24	50335030001	PVC-HOSE 6X9	x
25	78135025000	RADIATOR HOSE L/S 2012	1
26	78135027000	RADIATOR HOSE R/S 2012	1
30	78135026033	RADIATORHOSE CPL. THERM.70°C	1
31	0770320020	O-RING 32,00X2,00	1
32	59435017000	THERMOSTAT 70 DEGREE 04	1
33	0016040183	SCREW FOR PLASTIC D=4X18	3
34	7733503400004	RADIATOR PROTECTION L/S+R/S SX	x
34	7733503400030	RADIATOR PROTECTION BLACK 07	2
35	77235073000	HOSE CONNECTOR L=172,5	1
40	41001052000	RUBBER SLEEVE D=12MM	4
41	77335001000	WASHER FOR RADIATOR 08	4
42	0023060123	COLLAR SCREW M6X12 TX	4
60	59011079100	FAN WIRING HARNESS	1
61	58011109105	FUSE 5 A 2003	1
63	0603142015	ALU SEALRING DIN7603-14X20X1,5	1
64	78035045000	THERMOSWITCH 95-100 DG	1
65	58435041000	FAN CPL. 12V LC4 2000	1
66	0081050181	SCREW FOR PLASTIC K50X18 T20	3
67	81235943000	FAN SUPPORT	1
68	0011400800	RIVET 4,0X 8 ALU	3

127813530 / C127813530

* NEW PART

X AS REQUIRED

VALVE DRIVE

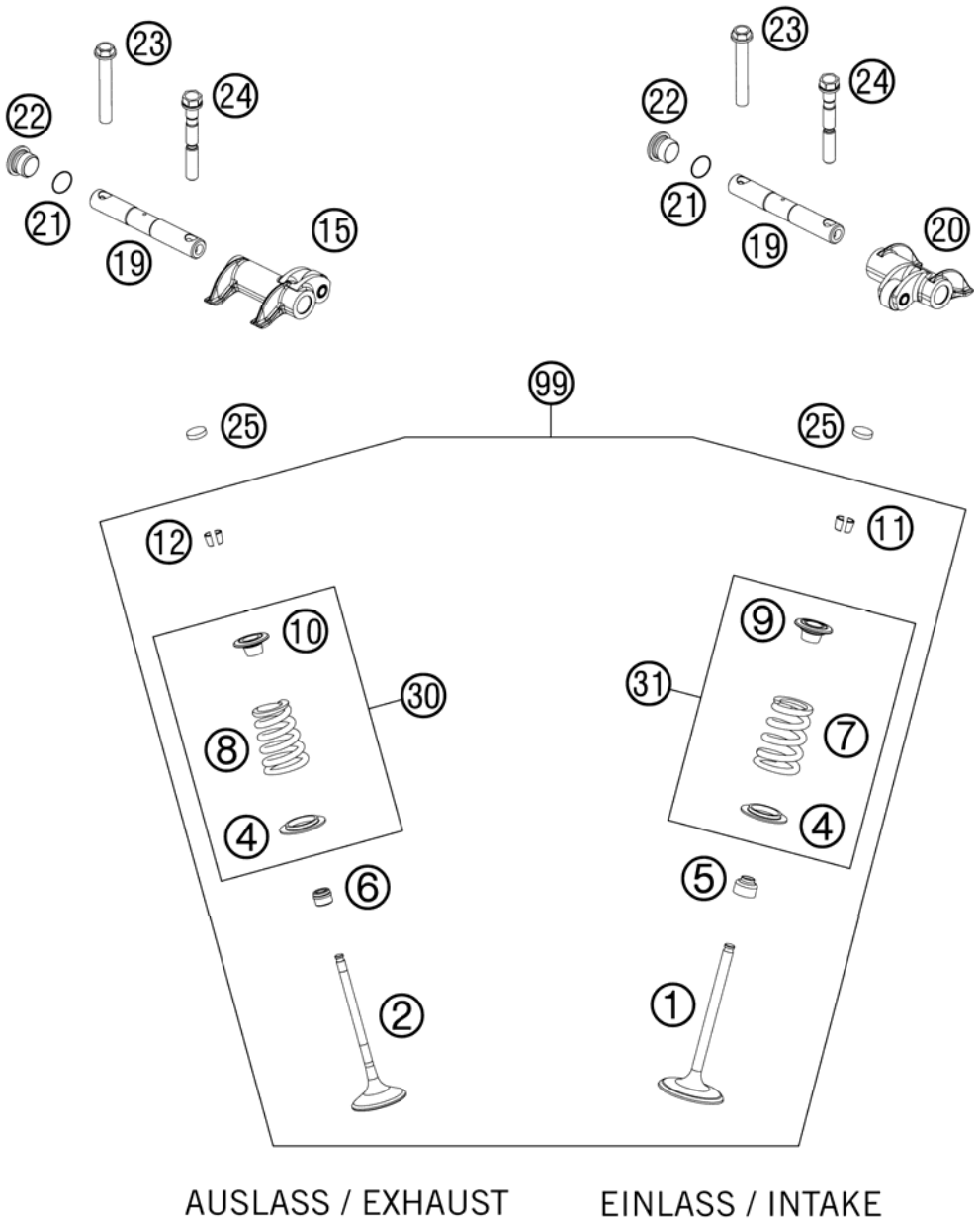

FIG	PART NUMBER	DESCRIPTION		QTY
1	78036030000	INTAKE VALVE		2
2	78036031000	EXHAUST VALVE		2
4	78036136000	VALVE SPRING HOLDER EXHAUST		4
5	59036027000	VALVE-STEM SEALING RACING		2
6	77036027000	VALVE-STEM SEALING	05	2
7	78036028000	VALVE SPRING INTAKE		2
8	78036029000	VALVE SPRING EXHAUST		2
9	78036132200	VALVE SPRING RETAINER INTAKE		2
10	78036032200	VALVE SPRING RETAINER EXHAUST		2
11	78036033000	VALVE COLLET LK 6H		4
12	77036033000	VALVE COLLET	05	4
15	78036061044	ROCKER ARM EXHAUST CPL.		1
19	78036056200	ROCKER ARM SHAFT		2
20	78036060044	ROCKER ARM INTAKE CPL.		1
21	0770110015	O-RING 1,5x11 SILICON		2
22	78036081000	HOLDING BOLT M14X1,5		2
23	77036080000	SPECIAL SCREW M7X40 WS10		2
24	78036080000	FIT BOLT M7X1X55		2
25	60036035230	SHIM D=10/2,30	03	x
25	60036035235	SHIM D=10/2,35	03	x
25	60036035240	SHIM D=10/2,40	03	x
25	60036035245	SHIM D=10/2,45	03	x
25	60036035250	SHIM D=10/2,50	03	x
25	60036035255	SHIM D=10/2,55	03	x
25	60036035260	SHIM D=10/2,60	03	x
25	60036035265	SHIM D=10/2,65	03	x
25	60036035270	SHIM D=10/2,70	03	x
25	60036035275	SHIM D=10/2,75	03	x
25	60036035280	SHIM D=10/2,80	03	x
25	60036035285	SHIM D=10/2,85	03	x
25	60036035290	SHIM D=10/2,90	03	x
25	60036035295	SHIM D=10/2,95	03	x
25	60036035310	SHIM D=10/3,10	03	x
25	60036035315	SHIM D=10/3,15	03	x
25	60036035320	SHIM D=10/3,20	03	x

127813610 / C127813610

* NEW PART

X AS REQUIRED

VALVE DRIVE

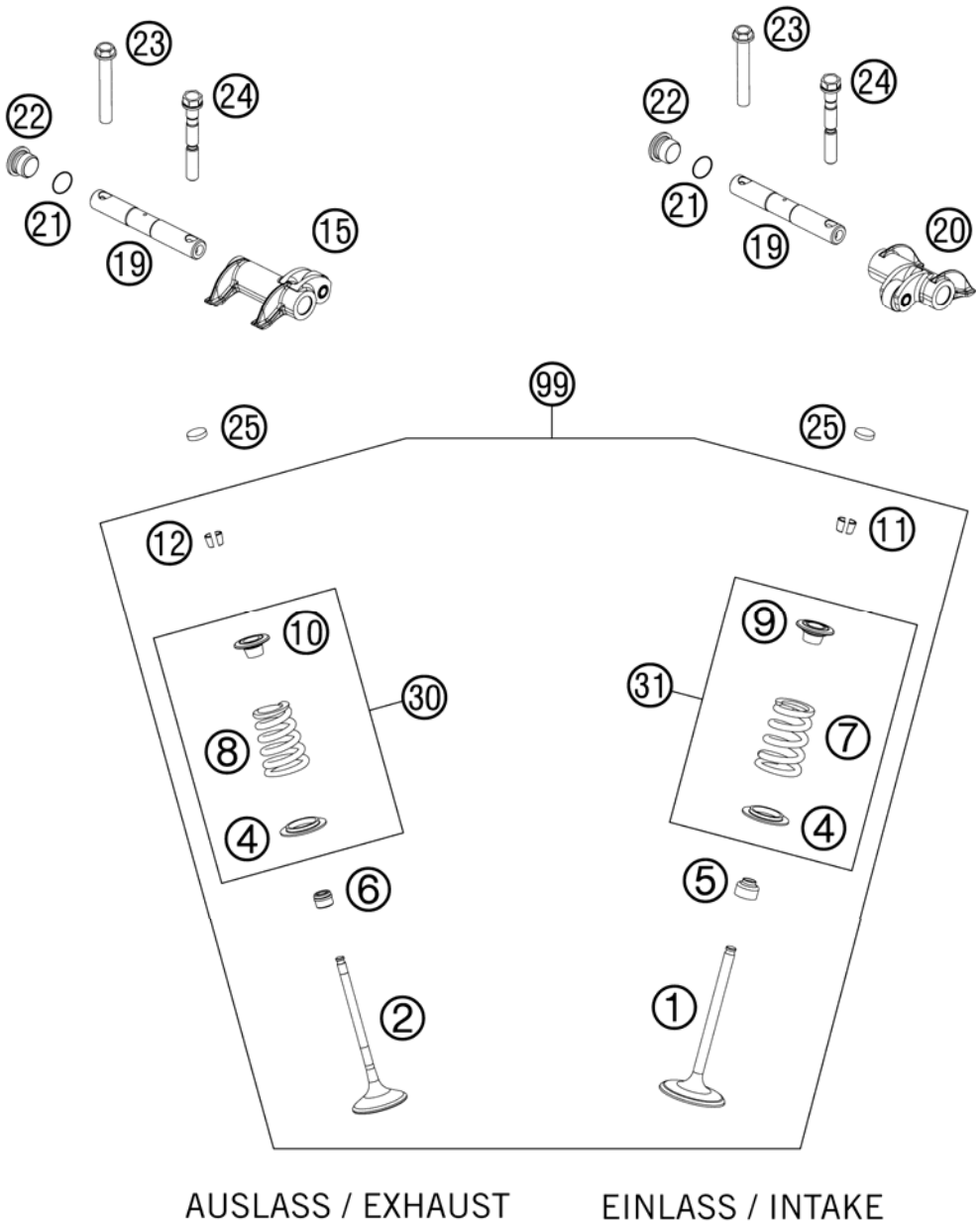

FIG	PART NUMBER	DESCRIPTION		QTY
25	60036035200	SHIM D=10/2,00	03	x
25	60036035205	SHIM D=10/2,05	03	x
25	60036035210	SHIM D=10/2,10	03	x
25	60036035215	SHIM D=10/2,15	03	x
25	60036035220	SHIM D=10/2,20	03	x
25	60036035225	SHIM D=10/2,25	03	x
25	60036035300	SHIM D=10/3,00	03	x
25	60036035305	SHIM D=10/3,05	03	x
30	78036029144	VALVE SPR.-KIT EX. 450-503	09	2
31	78036028144	VALVE SPR.-KIT INT. 450-530	09	2
99	78036030010	VALVE KIT		x

127813610 / C127813610

* NEW PART

X AS REQUIRED

TIMING DRIVE

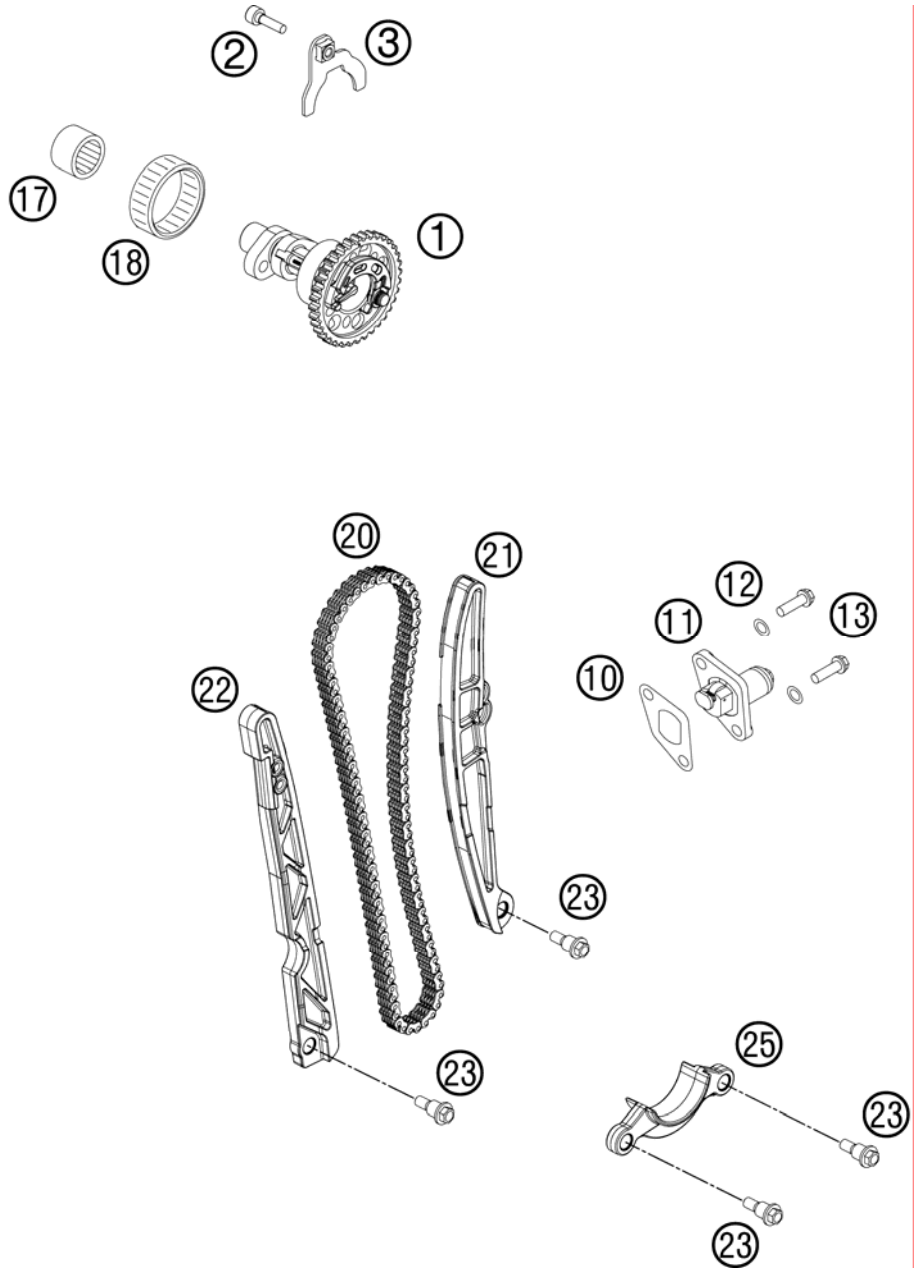

FIG	PART NUMBER	DESCRIPTION	QTY
1	81736010133	CAMSHAFT WITH AUTODECO	1
2	0025060206	HH COLLAR SCREW M6X20 TX30	1
3	78036012033	RETAINING PLATE CAMSHAFT CPL.	1
10	59036003050	GASKET TIMING CHAIN TENSIONER	1
11	59036003000	TIMINGCHAIN TENSIONER CPL.RAC.	1
12	0603061001	CU-SEAL RING DIN7603-6X10X1	2
13	0025060166	HH COLLAR SCREW M6X16 TX30	2
17	0618182414	NEEDLE SLEEVE HK1814RS18/24/14	1
18	0618404712	NEEDLE SLEEVE HK4012B40X47X12	1
20	78636013000	TIMING CHAIN 114T 08	1
21	78136002000	TIMING CHAIN TENSIONER	1
22	78136001000	TIMING CHAIN GUIDE	1
23	77236001060	BUSHING SCREW M6	4
25	78136018000	FAILURE PROTECTION	1

127813620 / C127873620

* NEW PART

X AS REQUIRED

CYLINDER HEAD

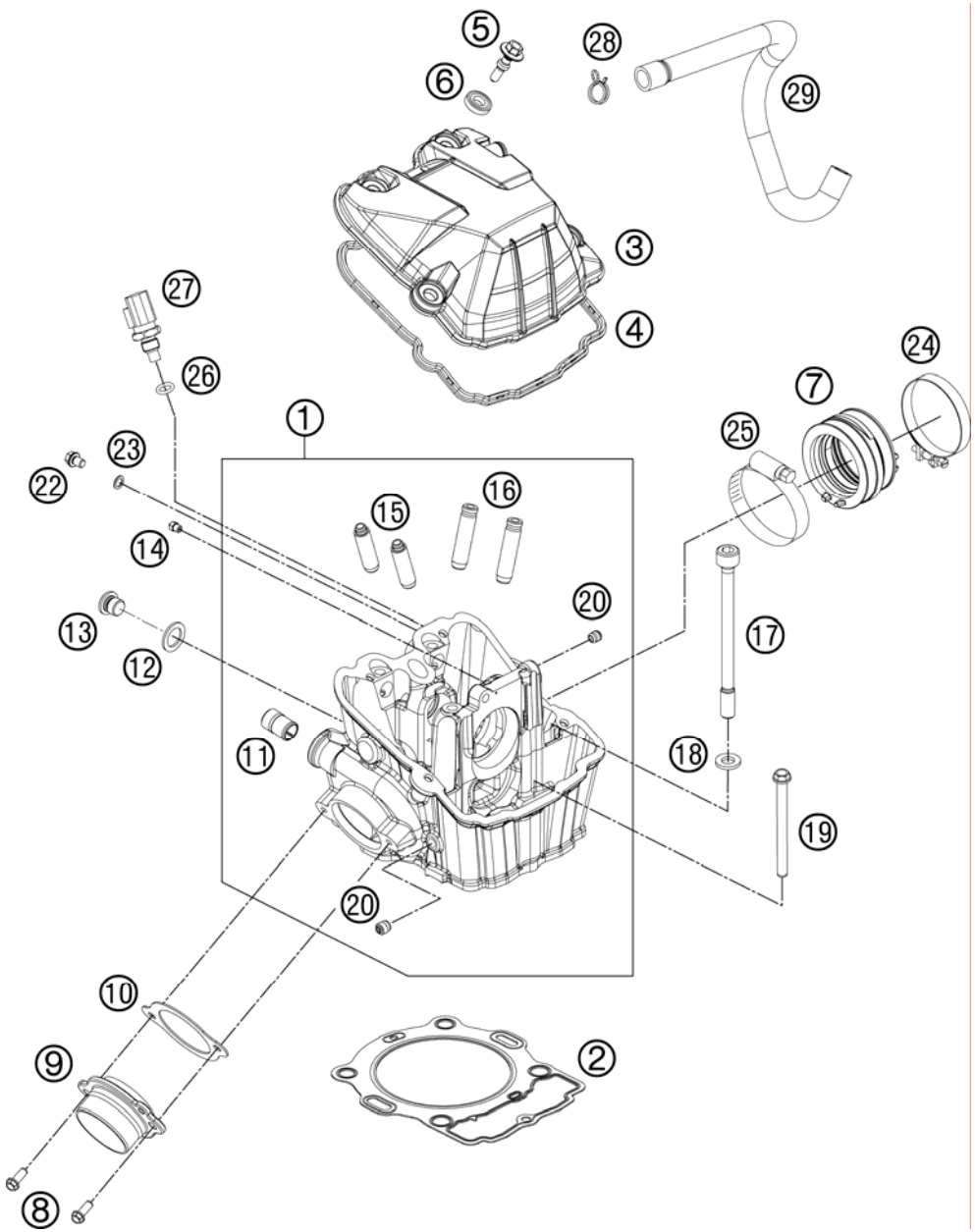

FIG	PART NUMBER	DESCRIPTION	QTY
1	78136020044	CYLINDER HEAD CPL.	1
2	78030036000	CYLINDER HEAD GASKET 08	1
3	7803605200033	VALVE COVER BLACK MATT	1
4	78036053000	VALVE COVER GASKET	1
5	78036054100	VALVE COVER SCREW	4
6	75036052010	DECOUPLING ELEMENT 07	4
7	77236044000	CONNECTION RUBBER EFI	1
8	0025060166	HH COLLAR SCREW M6X16 TX30	2
9	78136139000	EXHAUST FLANGE	1
10	78036041000	EXHAUST FLANGE GASKET	1
11	58030010200	SCREW IN NOZZLE M20X1,5	1
12	58038022000	CU-SEAL RING DIN7603-12X18X1,5	1
13	78036024000	PLUG SCREW SAS M12X1,5	1
14	60030063070	OIL JET 70 M5	1
15	77136026001	VALVE GUIDE OUTLET	2
16	78136025001	VALVE GUIDE INTAKE	2
17	78630044000	CYL. HEAD SCREW M10X1,25 L=138	4
18	77336089010	WASHER 19X10,5X2,5	4
19	0025060856	HH COLLAR SCREW M6X85 TX30	1
20	59030296000	SCREW PLUG	3
22	0025060086	HH COLLAR SCREW M6X8 TX30	1
23	0603061001	CU-SEAL RING DIN7603-6X10X1	1
24	61036047000	HOSE CLAMP GEMI 63MM 05	1
25	77236048000	HOSE CLAMP GEMI 58MM	1
26	0770100020	O-RING 10,00X2,00 SILCONE	1
27	60011252000	TEMPERAT.-SENSOR WATER LC8 02	1
28	58431082100	YDNAC-CLAMP 10173 (16MM) '98	1
29	78130087000	ENGINE BREATHER TUBE	1

127813630 / C127873630

* NEW PART

X AS REQUIRED

LUBRICATING SYSTEM

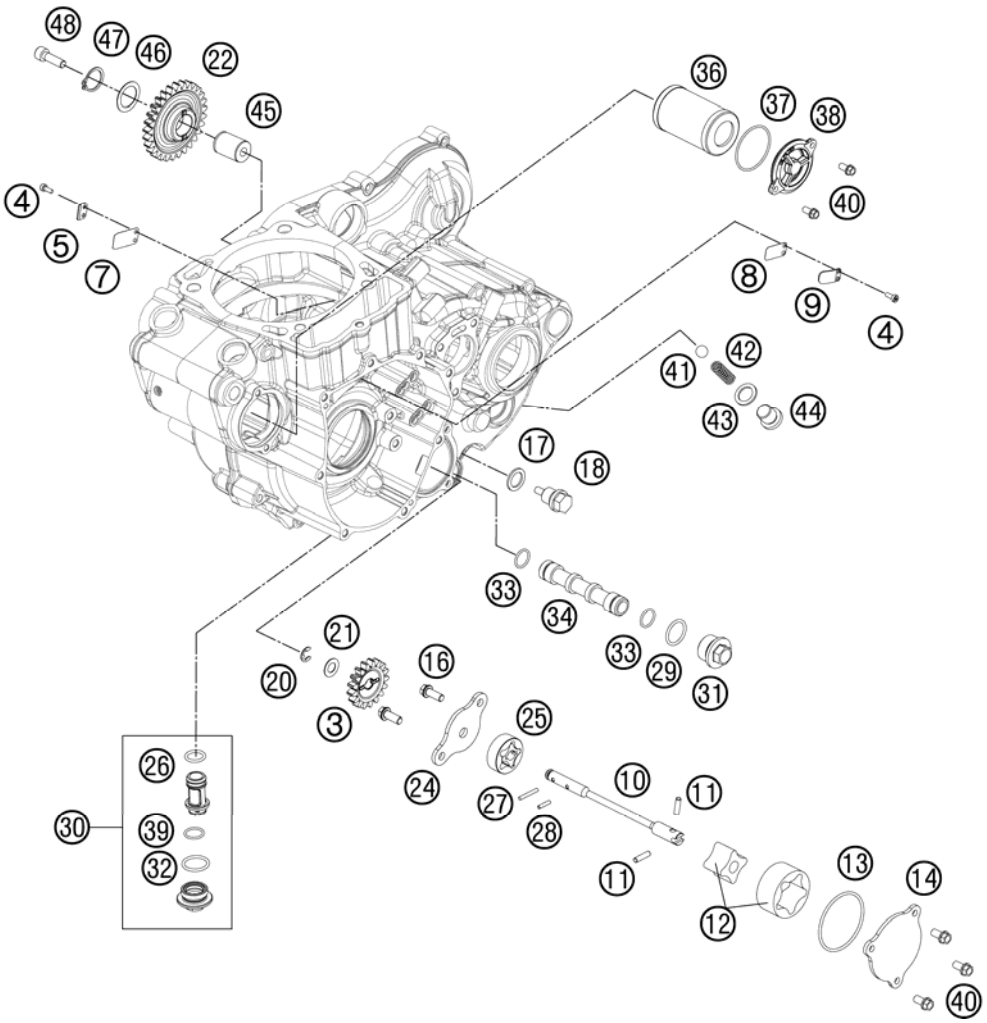

FIG	PART NUMBER	DESCRIPTION	QTY
3	78038001017	OIL PUMP GEAR 17 T	1
4	0458030080	CYLIND.SCREW M3X8 ISO 14580 SS	4
5	75030003050	STOP SHEET MEMBRANE 07	1
7	75030003051	MEMBRANE 07	1
8	81205027003	MEMBRAN CRANKCASE	1
9	81205027004	TAB WASHER MEMBRAN CSC	1
10	78138102000	OIL PUMP SHAFT SP-DP	1
11	0402041580	NEEDLE ROLLER NRB 4X15,8 G2	2
12	61238111000	ROTOR-SET CPL. 22MM	1
13	0770440020	O-RING 44,00X2,00 VITON	1
14	78038004000	OIL PUMP COVER SUCTION PUMP	1
16	0025060166	HH COLLAR SCREW M6X16 TX30	2
17	58038022000	CU-SEAL RING DIN7603-12X18X1,5	1
18	58030021000	OILDRAIN PLUG W.MAG. M 12X1,5	1
20	0799060000	TAB WASHER DIN6799-RS 6,0	1
21	58038007755	STOP DISK 8,1 X 15 X 0,5	1
22	78138001029	IDLER GEAR 1 29Z	1
24	78138003000	OIL PUMP COVER	1
25	59038011012	OILPUMP ROTOR 12MM G-95R/003	1
26	0770012021	O-RING 12X2 VITON GREEN	1
27	0402040980	NEEDLE ROL.DIN5402 NRB 4X9,8	1
28	0402251180	NEEDLE ROLLER DIN5402 2,5X11,8	1
29	0770020170	O-RING 17,17X1,78 GLO	1
30	78138015001	OIL SCREEN CPL.	1
31	59038017000	PLUG M20X1,5 WS=13	1
32	0770170200	O-RING 17,00X2,00	1
33	07701250151	O-RING 12,5X1,5 VITON V75	2
34	59038016100	OIL SCREEN	1
36	77038005044	OIL FILTER WITH GASKET 06	1
37	07700390261	O-RING 39,34X2,62	1
38	75038041200	OILFILTER CAP	1
39	0770125015	O-RING 12,5X1,5 NBR	1
40	0025050166	HH COLLAR SCREW M5X16 TX30	5
41	0401090003	BALL DIN5401-9	1
42	58038023300	PRESSURE SPRING L=25MM D=1MM	1

127813810 / C127813810

* NEW PART

X AS REQUIRED

LUBRICATING SYSTEM

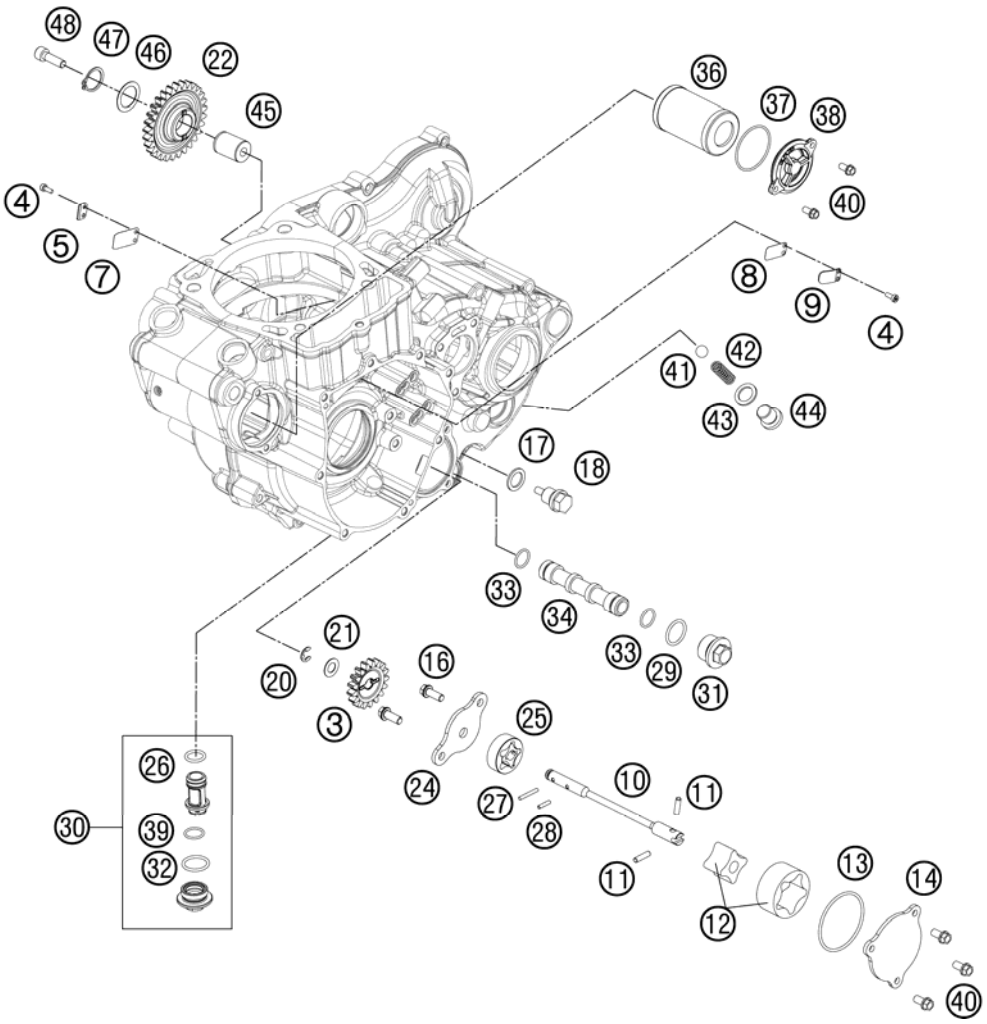

FIG	PART NUMBER	DESCRIPTION	QTY
43	58038022000	CU-SEAL RING DIN7603-12X18X1,5	1
44	0908120153	PLUG DIN0908-M12X1,5	1
45	78040028000	BUSHING PIN	1
46	0988172405	SHIM WASHER DIN0988-17X24X0,5	1
47	0471170010	CIRCLIP DIN0471-17X1	1
48	0912060208	AH SCREW DIN0912-M 6X20 SS	1

127813810 / C127813810

* NEW PART

X AS REQUIRED

IGNITION SYSTEM

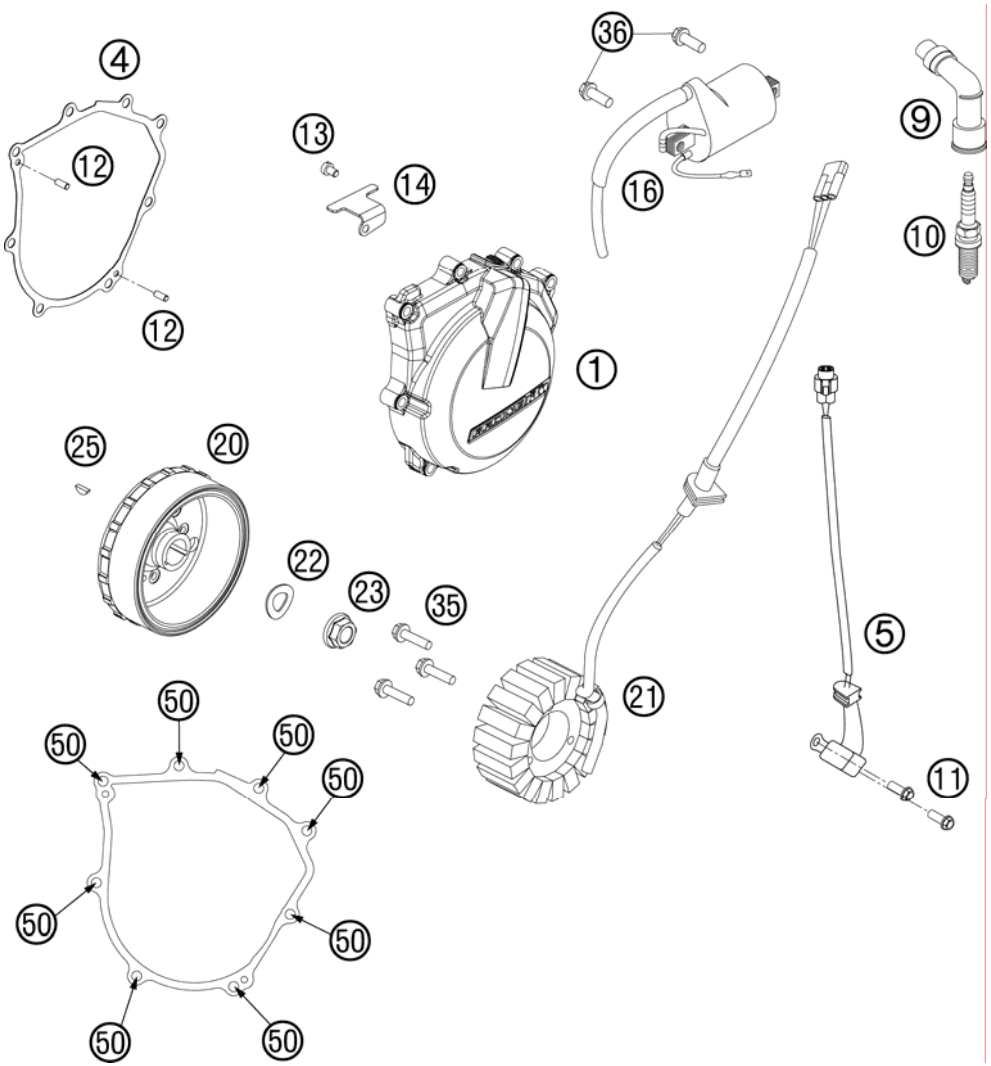

FIG	PART NUMBER	DESCRIPTION	QTY
1	7813000210015	IGNITION COVER	1
4	78130040000	GASKET - IGNITION COVER	1
5	59039034000	PULSER COIL KOKUSAN 4K3-A/B	1
9	78039090000	SPARK PLUG CONNECT. AP-TRS1908	1
10	75039093000	SPARK PLUG M12X1,25 LKAR8AI-9	1
11	0025050166	HH COLLAR SCREW M5X16 TX30	2
12	0402040980	NEEDLE ROL.DIN5402 NRB 4X9,8	2
13	0019040106S	FLAT HEAD SCREW ISA25 M4X10	1
14	81230002010	RETAINING PLATE	1
16	58439006000	IGNITIONCOIL IG3826 KOKUSAN'96	1
20	78039205000	ROTOR EXC 08	1
21	83039004000	STATOR	1
22	0137120000	SPRING WASHER DIN0137-B12	1
23	49030021000	COLLAR NUT M12X1 R/S	1
25	0888030050	WOODRUFF KEY DIN6888-3X5X13	1
35	0025050306	HH COLLAR SCREW M5X30 TX30	3
36	0025060166	HH COLLAR SCREW M6X16 TX30	3
50	0025060256	HH COLLAR SCREW M6X25 TX30	8

127813910 / C127813910

* NEW PART

X AS REQUIRED

ELECTRIC STARTER

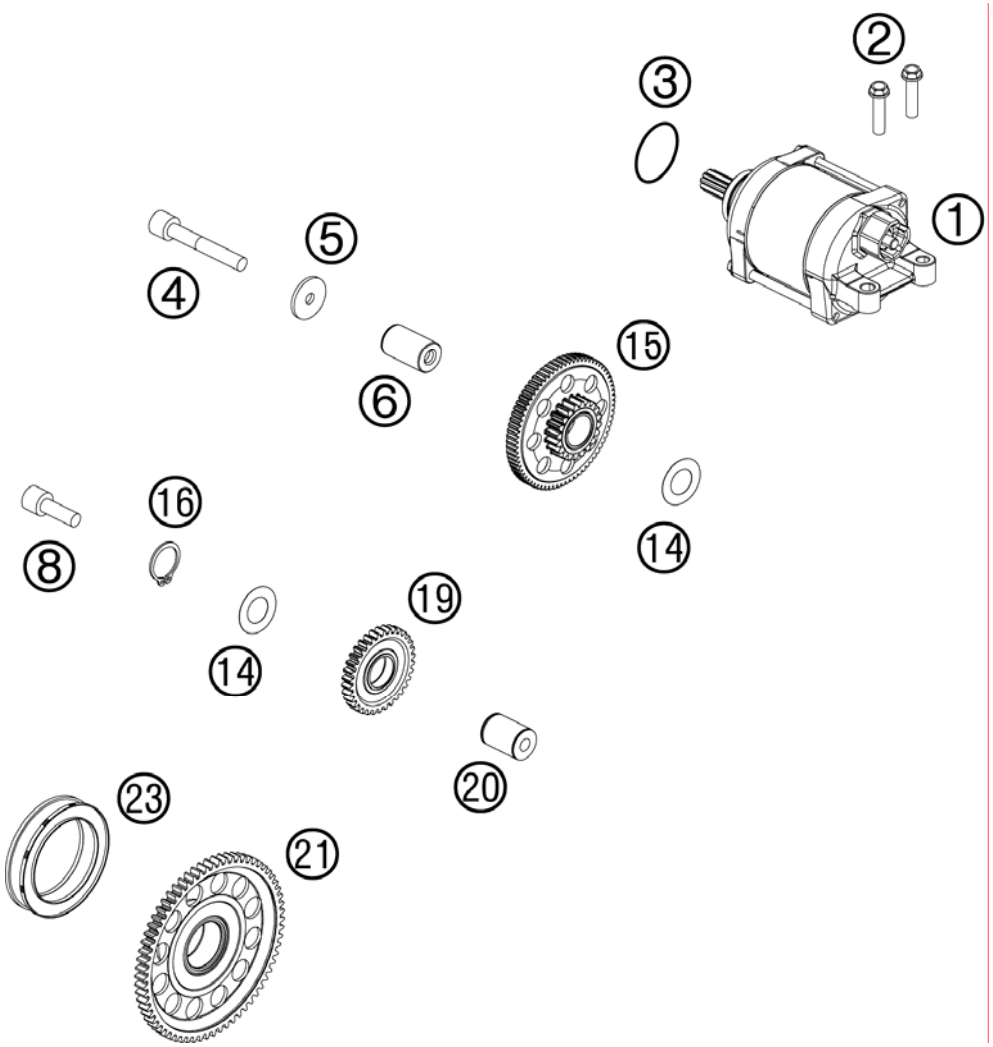

FIG	PART NUMBER	DESCRIPTION	QTY
1	78140001000	E-STARTER CPL. 0,5KW	1
2	0025060256	HH COLLAR SCREW M6X25 TX30	2
3	0770300030	O-RING 30X3 VITON	1
4	0912060404	AH SCREW DIN0912-M 6X40 A2	1
5	78040016004	STOP DISC 6X23X2	1
6	78040029000	BEARING BOLT	1
8	0912060208	AH SCREW DIN0912-M 6X20 SS	1
14	0988172405	SHIM WASHER DIN0988-17X24X0,5	2
15	78040016100	TORQUE LIMITER CPL.	1
16	0471170010	CIRCLIP DIN0471-17X1	1
19	78040022000	IDLER GEAR 30-T CPL.	1
20	78040028000	BUSHING PIN	1
21	78040020133	FREEWHEEL GEAR CPL.	1
23	75040026000	FREE WHEEL	1

127814010 / C127814010

* NEW PART

X AS REQUIRED

THROTTLE BODY

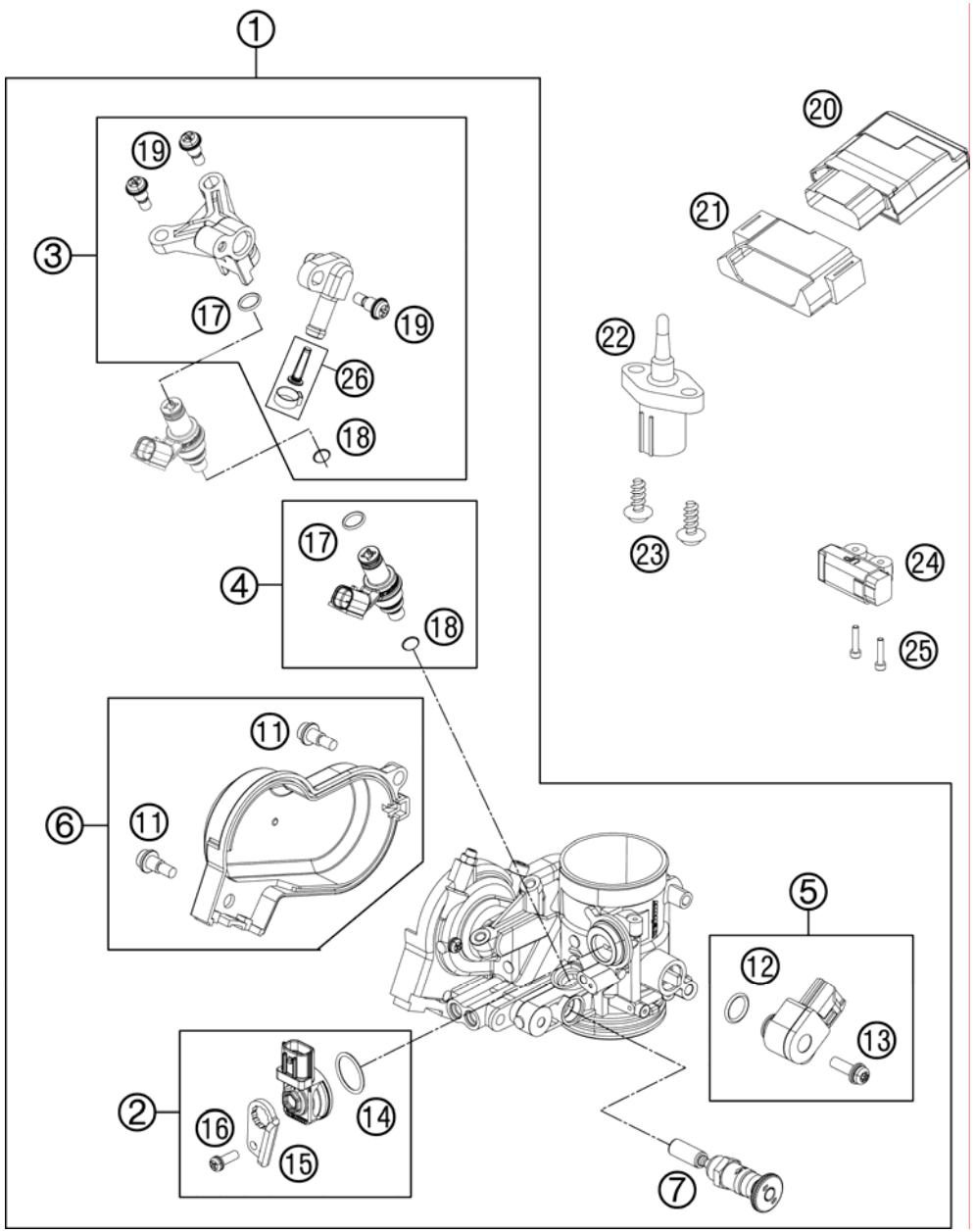

FIG	PART NUMBER	DESCRIPTION	QTY
1	77241001000	THROTTLE BODY	1
2	81241085044	MAP SENSOR CPL. 09	1
3	81241013044	FUEL RAIL CPL. 09	1
4	75041023144	INJECTOR KIT CPL.	1
5	81241077044	TPS KPL. 09	1
6	81241056044	THROTTLE COVER CPL. 09	1
7	81241060000	STARTER VALVE COMP.	1
11	81241056020	SPECIAL SCREW AH	2
12	61041077010	O-RING THROTTLE POS. SENSOR	1
13	81241077030	SPECIAL SCREW	1
14	75041085010	O-RING	1
15	81241085020	PLATE 09	1
16	81241085030	SPECIAL SCREW	1
17	75041023020	O-RING	1
18	75041023010	SEAL RING	1
19	75041013010	SCREW SHOULDER	3
20	81241031100	TIMING CHARGER EFI	1
21	77241031050	RUBBER BRACKET ECU	1
22	61041080000	AMBIENT-AIR TEMPERATURE SENSOR	1
23	0025050166	HH COLLAR SCREW M5X16 TX30	2
24	61041088000	ROLLOVER SENSOR 05	1
25	0025060206	HH COLLAR SCREW M6X20 TX30	2
26	78141013044	FUELFILTER KIT	1

127724110 / C127814110

* NEW PART

X AS REQUIRED

NOTICE

KTM Group Partner

3CM089550LEN

Art.Nr.: 3CM089550LEN 6/2011

KTM-Sportmotorcycle AG

A-5230 Mattighofen

www.ktm.at