WWW.KTM.COM

390 Duke, orange - B.D. 2018 2018

ART.-NR.: F4375R1EN

FRONT FORK, TRIPLE CLAMP

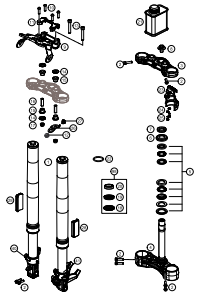

4

HANDLEBAR, CONTROLS

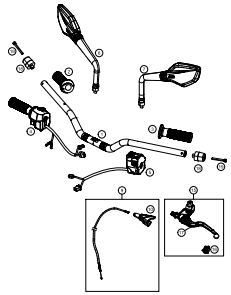

5

FRAME

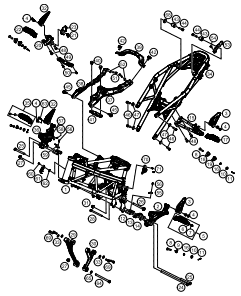

6

SIDE / CENTER STAND

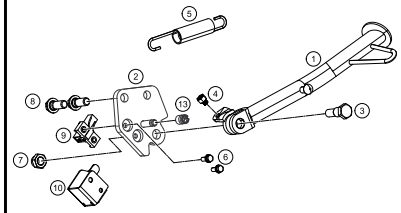

8

SHOCK ABSORBER

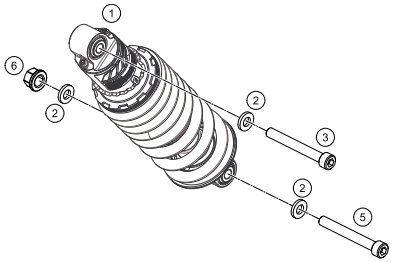

9

SWING ARM

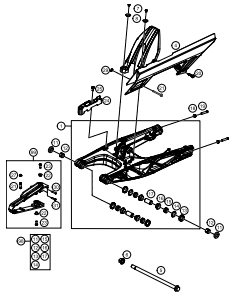

10

EXHAUST SYSTEM

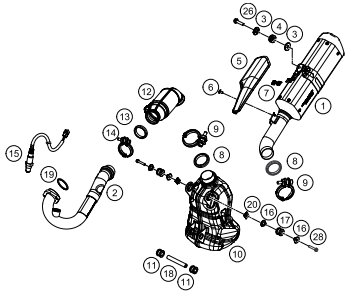

11

AIR FILTER

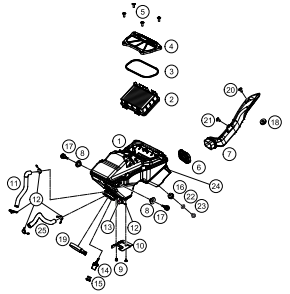

12

TANK, SEAT

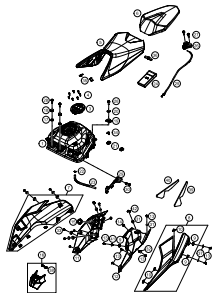

13

FUEL PUMP

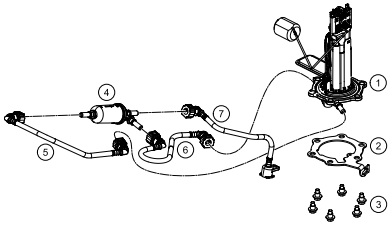

15

MASK, FENDERS

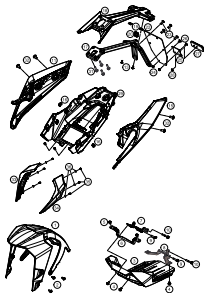

16

DECAL

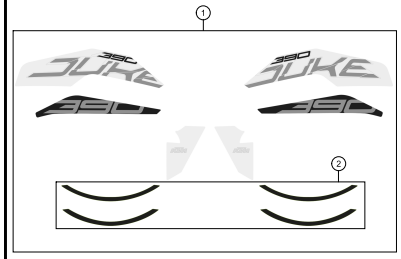

17

FRONT WHEEL

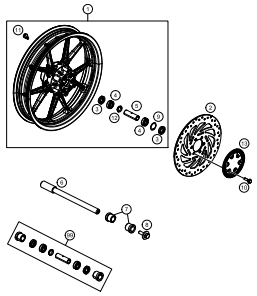

18

REAR WHEEL

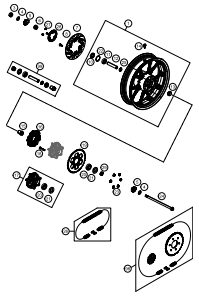

19

WIRING HARNESS

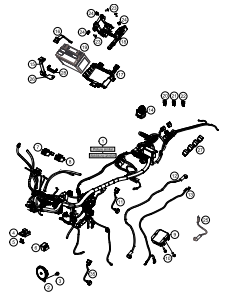

20

FRONT BRAKE CONTROL

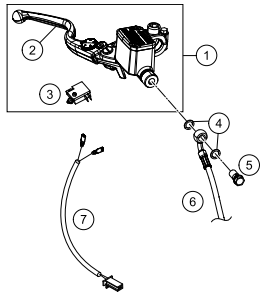

21

REAR BRAKE CONTROL

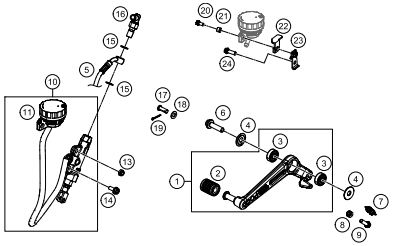

22

FRONT BRAKE CALIPER

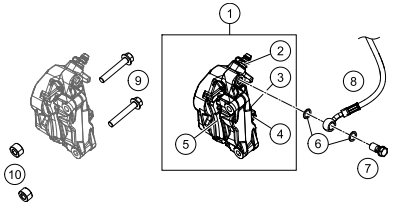

23

REAR BRAKE CALIPER

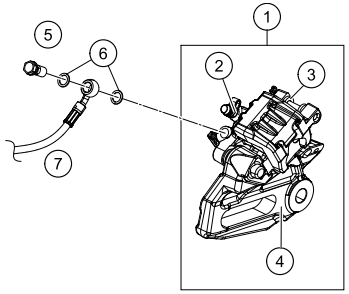

24

LIGHTING SYSTEM

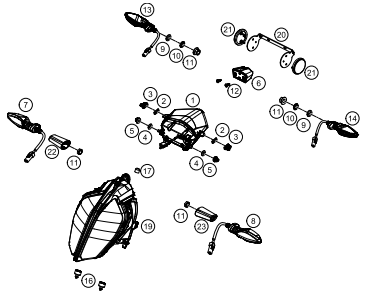

25

INSTRUMENTS / LOCK SYSTEM

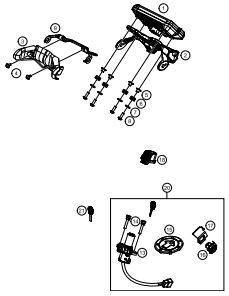

26

EVAPORATIVE CANISTER

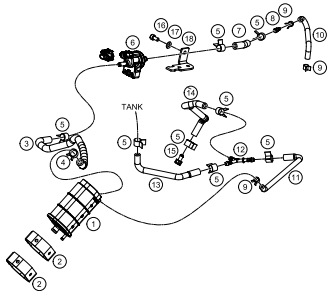

27

ANTIBLOCK SYSTEM ABS

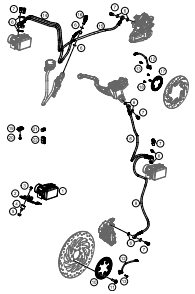

28

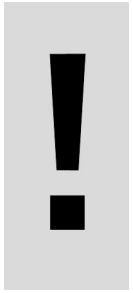

All information contained is without obligation. KTM Sportmotorcycle GmbH particularly reserves the right to modify any equipment, technical specifications, prices, colors, shapes, materials, services, service work, constructions, equipment and the like so as to adapt them to local conditions or to cancel any of the above items, all without previous announcement and without giving reasons. KTM may stop manufacturing certain models without previous notice. KTM shall not be held liable for any deviations of availability and/or ability to deliver, illustrations, descriptions, printing and/or other errors. The illustrated models partly contain extra equipment, which is not applied to standard models.

© by KTM Sportmotorcycle GmbH, Mattighofen AUSTRIA; All rights reserved; Reprint, also in extracts, with written allowance of KTM Sportmotorcycle GmbH, Mattighofen only.

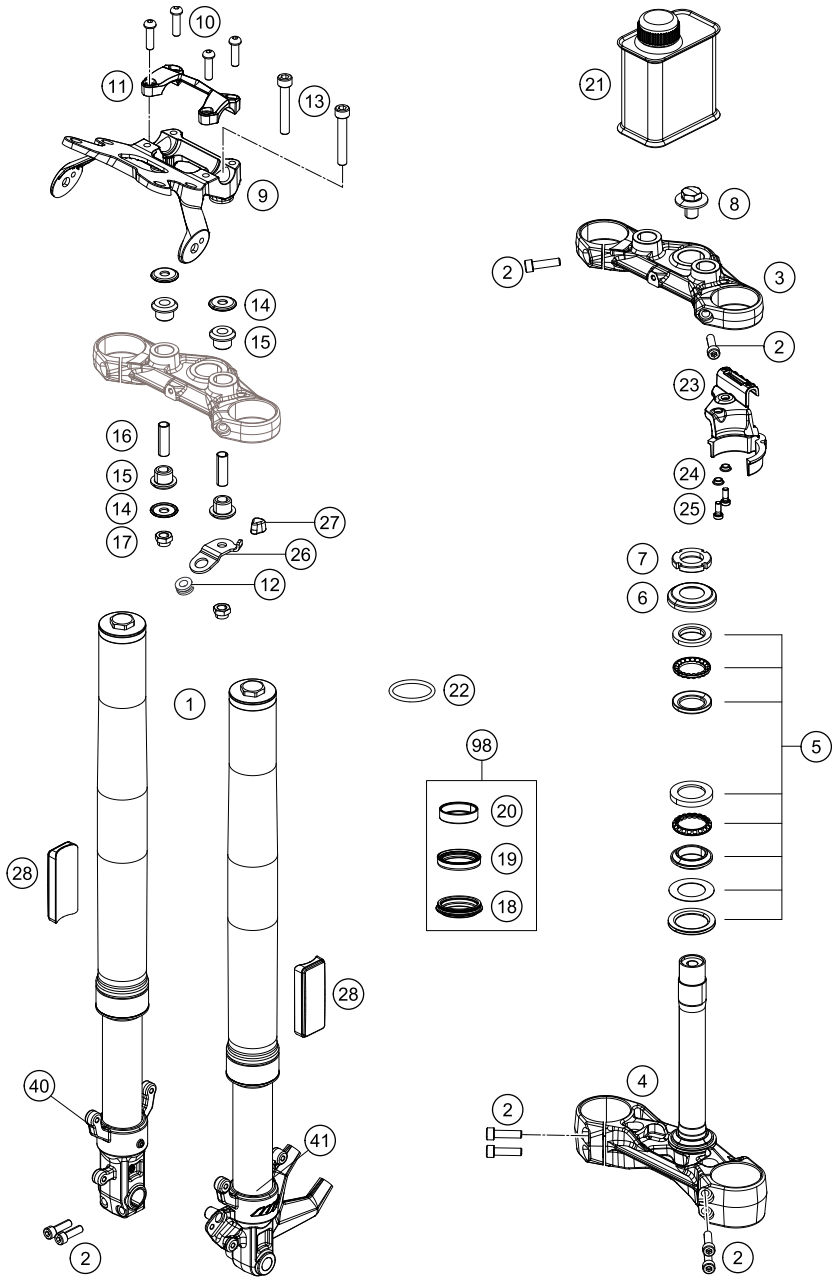

POS	PARTNUMBER	PARTNAME	PIECE
1	93301001100	Assembly leg left 390 HD	1
1	93301002100	Assembly leg right 390 HD	1
2	90501045000	AH SCREW M8X1.25X30	8
3	93001034033	Upper triple clamp GDC	1
4	93001032133	assembly lower triple clamp GDC	1
5	90101080044	STEERING HEAD BEARING-KIT	1
6	90101086000	protection cap	1
7	90101036000	adjusting ring steering head	1
8	90501044000	steering head screw	1
9	93014064000	Holder handsbar CUM TFT speedo	1
10	J912080293	Bolt socket-M8X1.25Xl 29Xblack	4
11	93001038000	Handlebar clamp	1
12	93032060030	Sleeve clutch cable guide	1
13	93001044000	hexagon socket screw M10X1.25X72 8.8	2
14	90101042000	WASHER 10,5X32X2	4
15	90101040000	RUBBER BUSHING	4
16	93001041000	Spacer tube 10.2X12X42	2
17	J982101253	SELF L. NUT M10X1,25 H11 WS17	1
18	43570624	DUST CAP 43X53,4X5,8	2
19	43570623	OIL SEAL RING 43X52,9X11,4	2
20	43570618	GUIDE BUSHING 43X47X12	2
21	48601166S1	FORK OIL SAE4 5L	1
22	40140024	O-RING NBR 43X2	2
23	93013055000	Hose clamp	1
24	90113055010	sleeve for hose clamp	2
25	J021060156	AH SCREW M6X15 10.9	2
26	93032059000	Bracket clutch cable guide	1
27	93032060020	RUBBER CLUTCH CABLE GUIDE	1
28	90212582001	side reflector, front	2
40	93001007033	assembly fork pipe rh.	1
41	93001006033	assembly fork pipe lh.	1
98	90101000010	REP. KIT FORK KPL.	1

179010110

18818

* NEW PART

X ON DEMAND

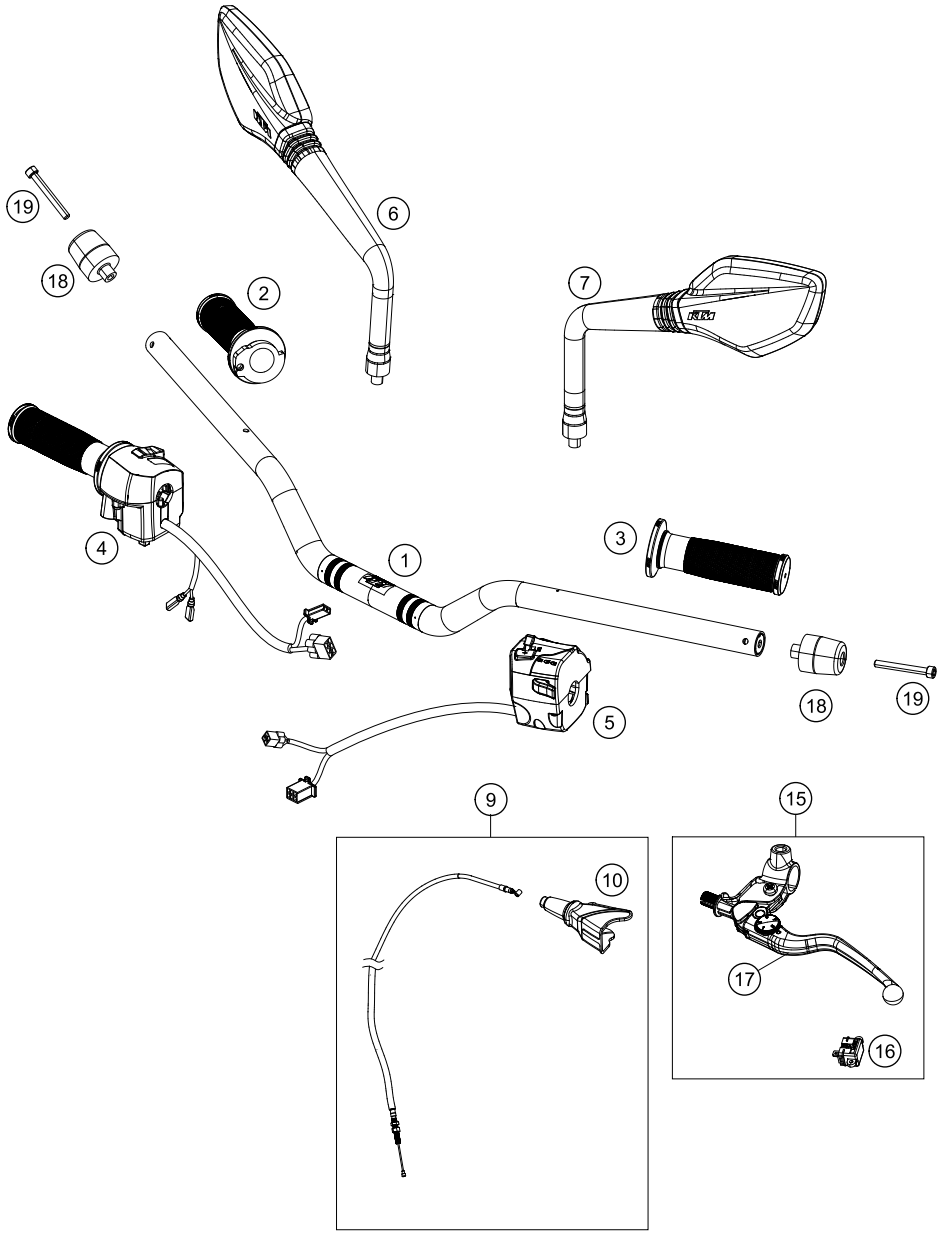

POS	PARTNUMBER	PARTNAME	PIECE
1	93002001000	Handlebar	1
2	93702010033	THROTTLE GRIP	1
3	90802039000	HAND GRIP L/S	1
4	93511074000	START-EMERGENCY STOP SWITCH	1
5	93011070000	Light switch	1
6	93012541000	Mirror r/s US	1
7	93012540000	Mirror l/s US	1
9	90802090000	CLUTCH CABLE	1
10	93802016000	BOOT CLUTCH LEVER	1
15	93302131000	Clutch lever adjustable	1
16	90511049000	clutch switch	1
17	93502031100	Clutch lever	1
18	90202004001	HANDLEBAR WEIGHT	2
19	J912060553	Hexagon screw M6X55	2

179020210

45032

* NEW PART

X ON DEMAND

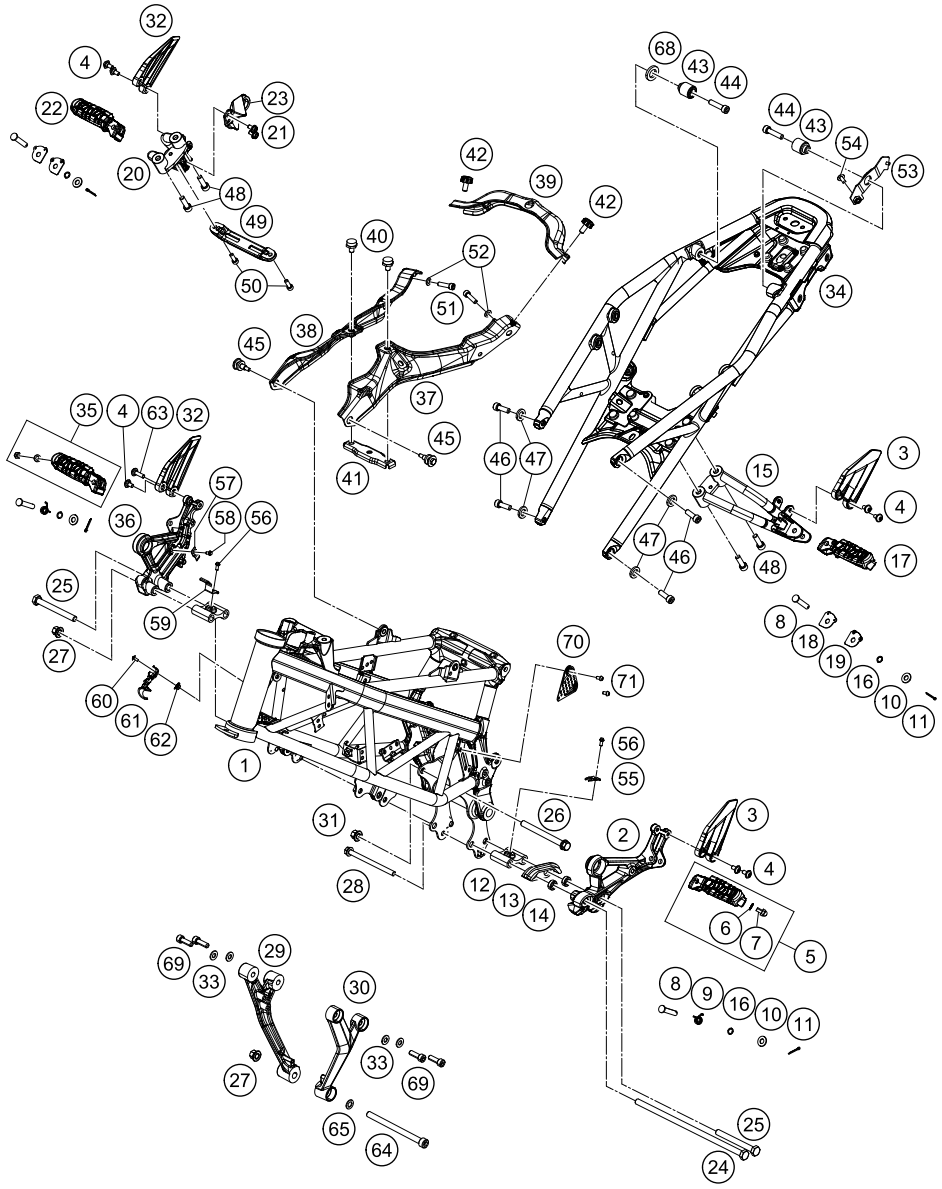

POS	PARTNUMBER	PARTNAME	PIECE
1	93003001100EB	Rahmen Duke 18 orange	1
2	93003038000	Footrest bracket front left	x
3	93003048050	Heel protector left	2
4	93008020060	Screw M6X1X9	x
5	90103040033	footrest front left cpl.	1
6	90103040001	PLAIN WASHER 6,4X12X1	2
7	J029060103S	CAP SCREW M6X10 SS	2
8	93003054000	Pin footrest pivot black	4
9	90103042000	footrest return spring	2
10	J125080004	WASHER M8	4
11	J094018250	PIN 25X1,8MM	4
12	90103038001	footrest support holder, front	2
13	90104070000	chainguide	1
14	90104066010	spacer chainguide	2
15	93003048000	Footrest bracket rear left	1
16	J770009015	O-RING 9X1,5	4
17	90103050033	footrest rear left cpl.	1
18	93003053000	Plate lock pillion step bottom	2
19	93003052000	Plate lock pillion step top	2
20	93003049000	Footrest bracket rear right	1
21	J025060101	Hexagon screw M6X10	2
22	90103051033	footrest rear right cpl.	1
23	93005084000	Retaining bracket	1
24	J025102656	HH COLLAR SCREW M10X1,25X265	1
25	J025100926	HH COLLAR SCREW M10X1,25X92	2
26	J025101103	HH COLLAR SCREW M10X110 WS14	1
27	90103038002	FLANGED NUT M10X1,25 WS14	3
28	J027081053	HH COLLAR SCREW M8X105 SW12	1
29	93303006000	Engine brace right	1
30	93303005000	Engine brace left250/390	1
31	93003005100	Nut engine support	1
32	93003049050	Heel protector right	2
33	J125080006	Washer M8	4
34	9300300200028	Rear frame white	1
35	90103041033	footrest front right cpl.	1
36	93003039000	Footrest bracket front right	1
37	93003002050	Seat support left	1
38	93003002151	Seat support right	1

189020310

49835

* NEW PART

X ON DEMAND

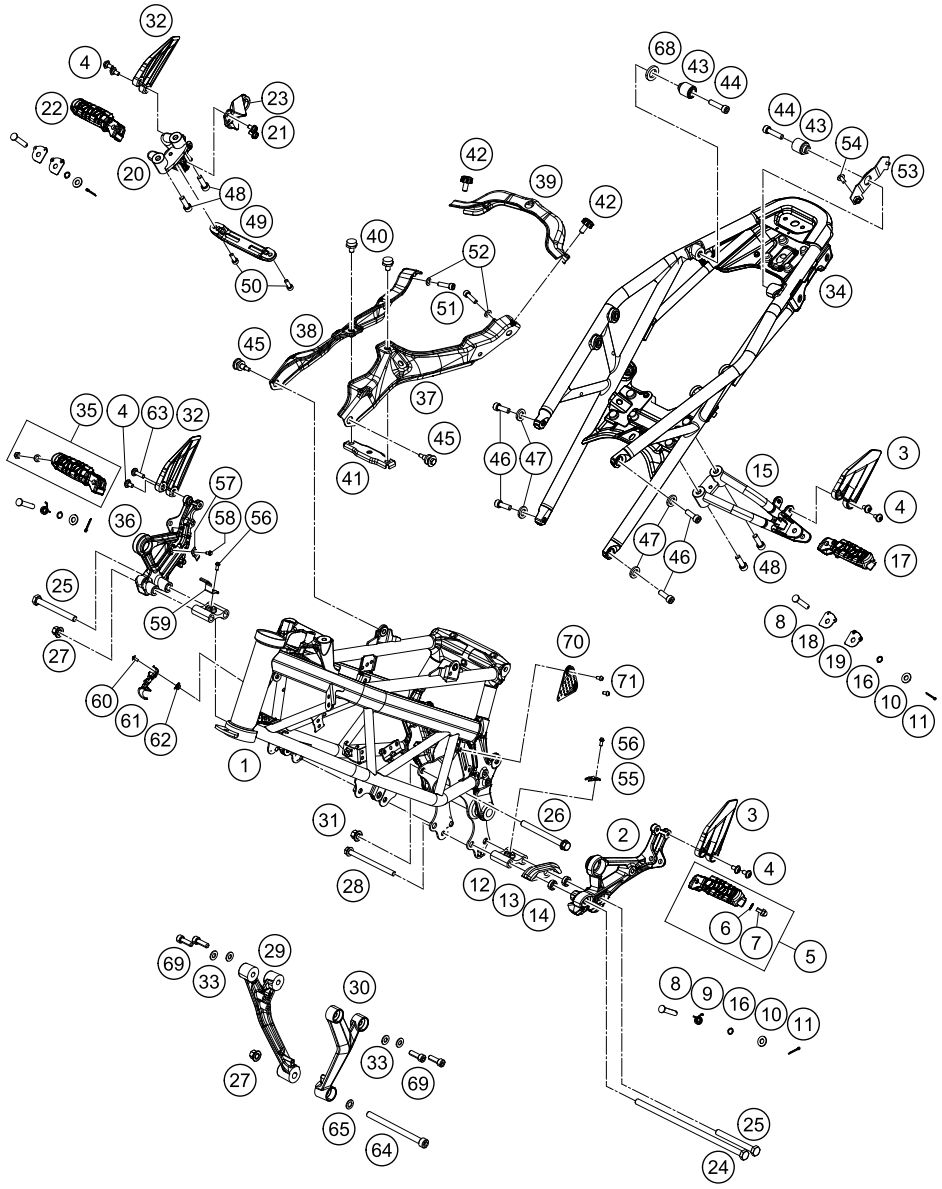

POS	PARTNUMBER	PARTNAME	PIECE
39	93003002030	Cross brace	1
40	93007044000	Retaining pin	2
41	93003001070	Seat cowl front complete	1
42	93008023000	Rubber buffer	2
43	93007047033	Seat support complete	2
44	J912080303	hexagon socket screw M8X30	2
45	93007046050	Screw	2
46	93003002070	hexagon socket screwM8X1.25X25	4
47	93003002080	Washer Plain-ID8.2XOD 14XT 2 BLK	4
48	90103098000	BOLT	4
49	93003056000	Passenger footrest bracket	1
50	J912060143	Hex socket screw M6X14	2
51	93008019070	hexagon socket screw M8X31	2
52	J125080002	Washer plain	2
53	93006040060	Retaining bracket	1
54	J031050163	CHEESE-HEAD SCREW M5X16	1
55	90111045050	CABLE BRACKET	1
56	90103032000	FLANGED BOLT M6X14	2
57	93013041000	Retaining bracket	1
58	J025060109	HH-COLLAR SCREW M6X10 SW8	1
59	93013026000	Support	1
60	93008044000	Sleeve spoiler inner RR MTG	1
61	93032059010	Guide clutch cable	1
62	90108050001	CLIP NUT M5	1
63	93008043000	Screw M6X1X25	1
64	90203008000	BOLT M10X135	1
65	J125100009	Washer M10	1
68	J125140003	Washer - plain	1
69	J912080251	Hexagon screw M8X25	4
70	93008041060	Hitzeschutz Seitenverkleidung	1
71	J031060106	SCREW BUTTON HEAD-M5X0.8XL 8XB	2

189020310

49835

* NEW PART

X ON DEMAND

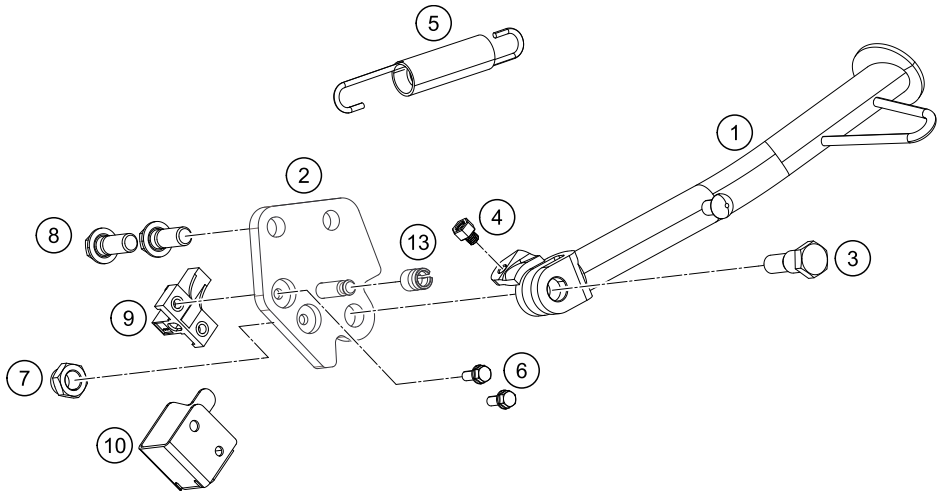

POS	PARTNUMBER	PARTNAME	PIECE
1	90103023000	SIDE STAND	1
2	93003026000	Side stand bracket	1
3	90103027000	SCREW F. SIDE STAND	1
4	90103029000	MAGNET HOLDER	1
5	90603024000	SIDE STAND SPRING	1
6	J011050133	HH COLLAR SCREW M5X13 SW8	2
7	J982101253	SELF L. NUT M10X1,25 H11 WS17	1
8	J025100253	Hexagon screw M10X25	2
9	93511045000	SWITCH SIDE STAND	1
10	90111045010	GUARD F. SIDE STAND SWITCH	1
13	90111040100	Bushing	1

179010360

18347

* NEW PART

X ON DEMAND

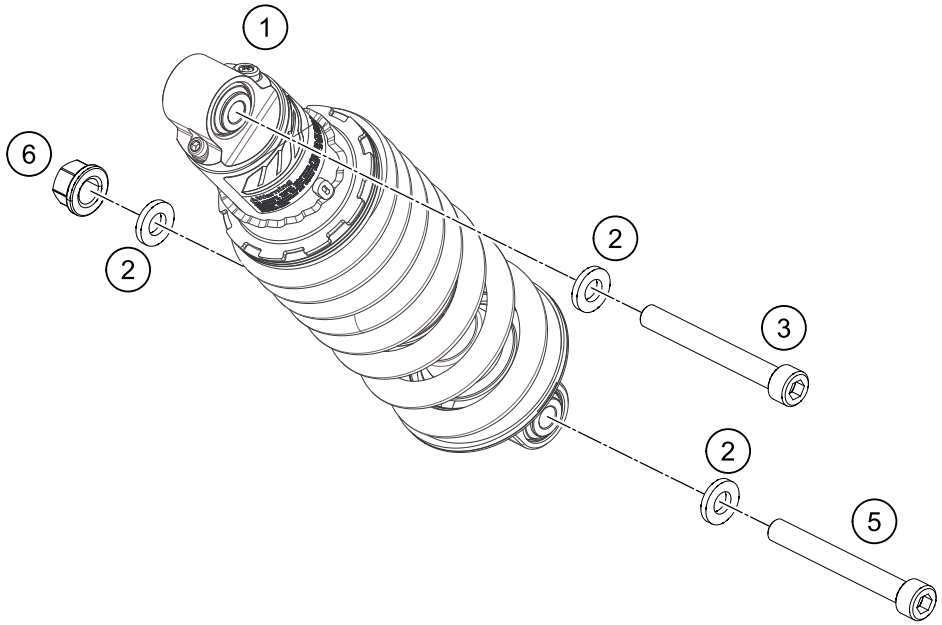

POS	PARTNUMBER	PARTNAME	PIECE
1	93304010000	Shock absorber	1
2	90104010003	PLAIN WASHER 10,2X20X3MM	3
3	93004016100	hexagon socket screw M10X1.25X62	1
5	J020100806	SHCS M10x1.25x80 - 10.9	1
6	90104010002	flanged hex nut M10x1.25 WS13	1

179010410

18463

* NEW PART

X ON DEMAND

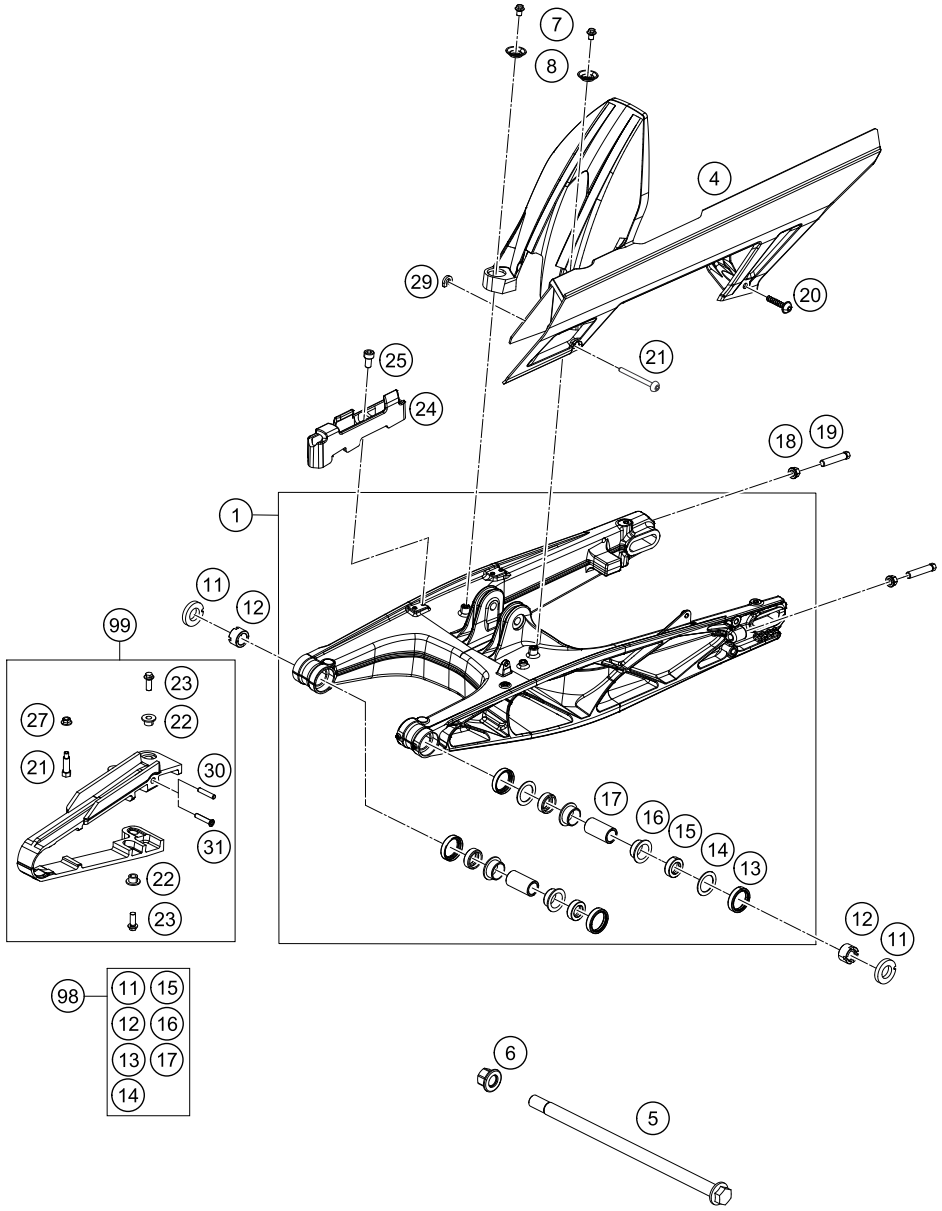

POS	PARTNUMBER	PARTNAME	PIECE
1	90504030044	SWING ARM CPL.	1
4	93004060100	Chain cover	1
5	90104037000	swingarm bolt L=299mm	1
6	90104038000	FLANGED NUT M14X1,5	1
7	J025060083	HH COLLAR SCREW M6X8 SW8	2
8	93004051000	Supporting shell	2
11	93004042000	Special wahser	2
12	90104046000	swingarm adjusting ring	2
13	90104034001	OIL SEAL RING 25X32X7	4
14	90104036000	Thrust washer 22.2x31.7x1	2
15	90104034000	cup for radial shaft seal	4
16	90104031000	Igus plain bearing	4
17	90104032000	sleeve bushing 15.1x20x38	2
18	90104010002	flanged hex nut M10x1.25 WS13	2
19	90104040000	BOLT HEX M10X1,25X50 WS10	2
20	93004064000	Plastic screw 6x30	1
21	93004065000	hexagon socket screw M5X0.8X55	1
22	90604062000	chain slider bushing	2
23	J025060169	HH COLLAR SCREW M6X16 SW8	2
24	93013047000	Support	1
25	J912050101	AH SCREW M5X10	1
27	90204060001	HH COLLAR NUT	1
29	90504067000	WASHER CHAIN SLIDING GUARD	1
30	90104070020	SLEEVE CHAIN GUARD	1
31	90904070020	SLEEVE CHAIN GUARD	1
98	90104230010	SWINGARM REP. KIT 11-17	x
99	90104066210	CHAIN GUARD KIT 250/390	x

179010490

19308

* NEW PART

X ON DEMAND

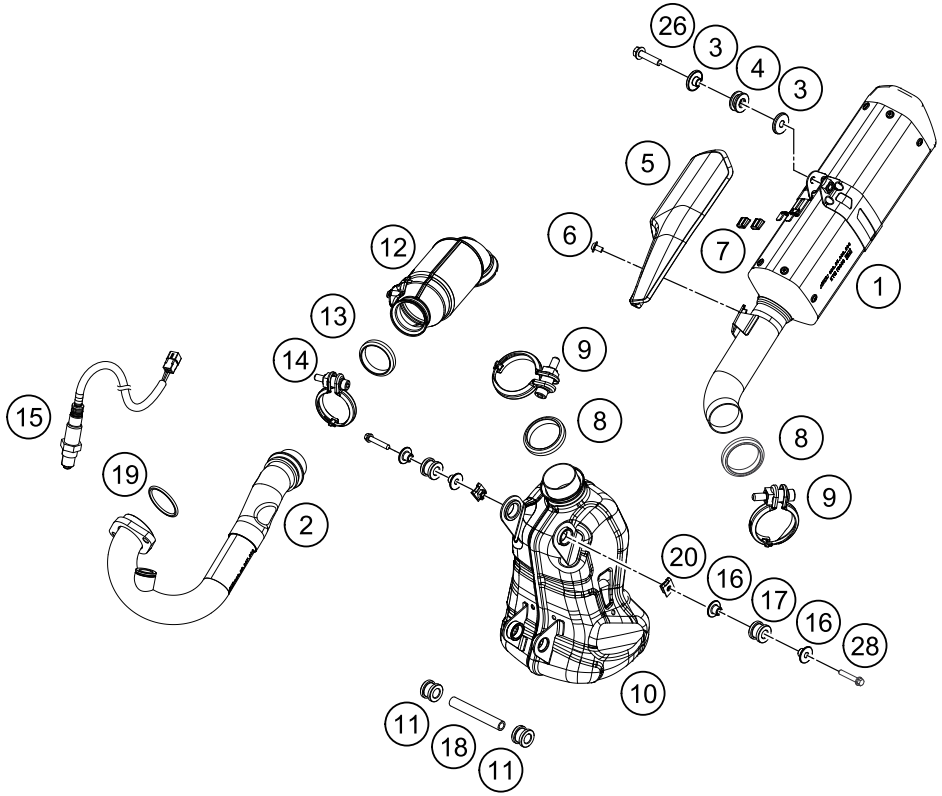

POS	PARTNUMBER	PARTNAME	PIECE
1	93805583000	Silencer MUFFLER SUB ASSEMBLY	1
2	93805007000	header cpl.	1
3	93805095000	BUSH MUFFLER	2
4	93805096000	DAMPER MUFFLER	1
5	93805011000	MUFFLER SHIELD	1
6	J031060103	Lens head screw M6X10	1
7	93805011003	GROMMET MUFFLER SHIELD	2
8	93805005100	GASKET PIPE C	2
9	93805058100	CLAMP DIA 60	2
10	93505050000	premuffler	1
11	90105068100	damper, bottom	2
12	93605008000	catalytic converter cpl.	1
13	93805005000	GASKET PIPE B	1
14	93805058000	CLAMP DIA 54	1
15	90141090000	oxygen sensor	1
16	90205086001	muffler mounting spacer bushing	4
17	90205068000	damper, bottom	2
18	90105084000	muffler mounting tube	1
19	90105004000	exhaust flange gasket	1
20	90103097000	clip nut	2
26	J025080353	BOLT FLANGED M8X35	1
28	90105000002	BOLT SILENCER MTG	2

179010510

45034

* NEW PART

X ON DEMAND

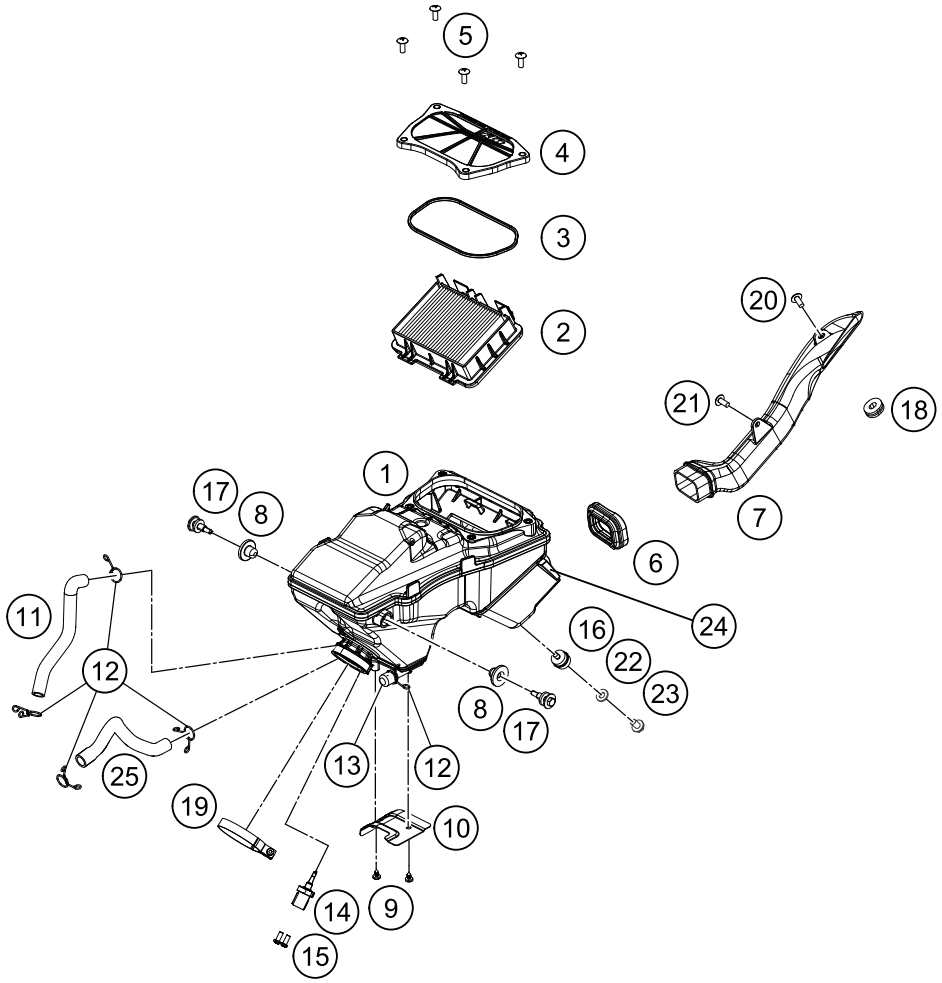

POS	PARTNUMBER	PARTNAME	PIECE
1	93306001044	Air filter Box Kit.	1
2	93006015000	FILTER	1
3	93006020050	Seal	1
4	93006002000	Air filter box cover	1
5	93006039000	Flat-head screw M6	4
6	93006001060	Carburetor connection boot	1
7	93006040000	Duct dirty side	1
8	93006001080	Damping rubber	2
9	J005050126	Lens head screw M5X12	2
10	93006001070	Heat protection	1
11	93030087050	Engine vent hose	1
12	90607017000	CLAMP 16MM	5
13	93030089000	Plug	1
14	93041080000	Intake air temperature sensor	1
15	J005050126	Lens head screw M5X12	2
16	90106001007	SILENT BLOCK AIRFILTER	1
17	93007046050	Screw	2
18	93008019010	Rubber bushing	1
19	90241002010	hose clamp	1
20	93008044000	Sleeve spoiler inner RR MTG	1
21	J031050166	Screw truss M5X16	1
22	J125060001	Washer - plain	1
23	J026060083	HH COLLAR SCREW M6X8 SW10	1
24	93006001015	Rubber cowl pad	1
25	93030088050	Engine vent hose	1

179020610

18465

* NEW PART

X ON DEMAND

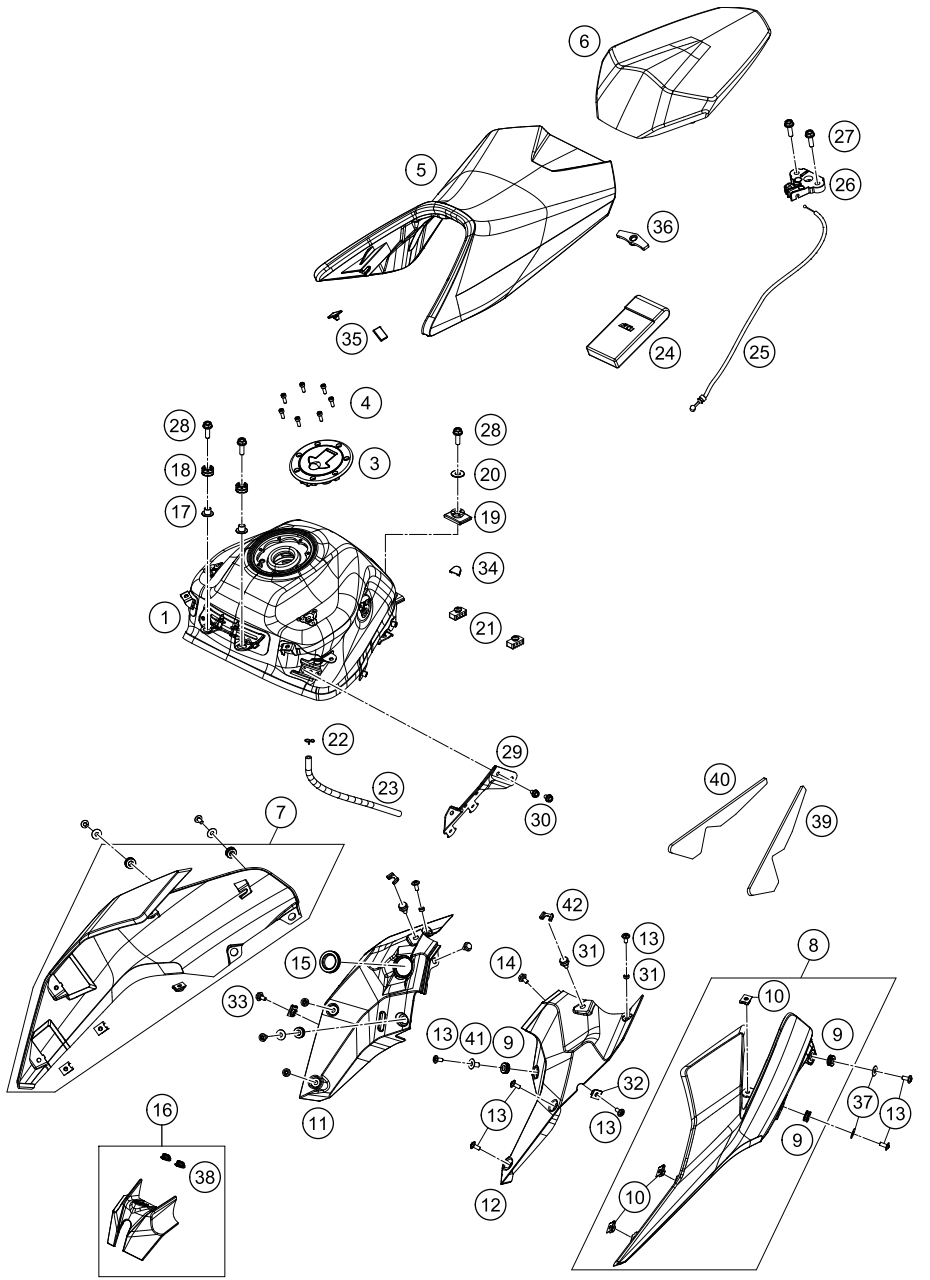

POS	PARTNUMBER	PARTNAME	PIECE
1	93007113000	Fuel tank	1
3	93807008000	Fuel tank cap	1
4	J912050151	AH SCREW M5X14 BLACK	7
5	93007040000	Rider seat	1
6	93007047000	Seat passenger complete	1
7	93008051000EB	Frontspoiler right orange	1
8	93008050000EB	Frontspoiler left orange	1
9	93008050040	Rubber bushing	6
10	90103097000	clip nut	6
11	93008055000	Inner cover right	1
12	93008056000	Inner cover left	1
13	90508006001	SOCKET HEAD BOLT M6X12	12
14	93008048000	Special screw	2
15	93035065010	Rubber bushing	1
16	93008057033	Cover for ignition lock complete	1
17	93008034000	Bushing	2
18	90507013006	GROMMET TANK MOUNTING	2
19	93007014000	Tank guard rear	1
20	90111060010	WASHER PLAIN 8,4X25X2	1
21	93007040010	Seat cowl pad	2
22	90107013008	CLAMP	1
23	90107013007	Tube drain cup cap	1
24	90529099000	TOOLKIT	1
25	93007052000	Cable seat lock	1
26	93007050000	Sseat lock ZSB	1
27	J025060203	HH COLLAR SCREW M6X20 SW10	2
28	J025080253	Hexagon screw M8X25	3
29	93015102000	Fastening	1
30	J025060103	HH COLLAR SCREW M6X10 SW10	2
31	93008044000	Sleeve spoiler inner RR MTG	2
32	90103097000	clip nut	2
33	90108076000	SPECIAL SCREW M6X12X3	1
34	93008059000	Rubber cap tank	4
35	90507047041	SEAT DUMPER SOZIUS SEAT	2
36	93007046000	Seat cowl pad	1
37	93008050050	Washer 6.2X20X1.5	6
38	93011068010	Rubber grommet ignition lock cover	2
39	93007025020	Tape cover LH	1

189010710

49989

* NEW PART

X ON DEMAND

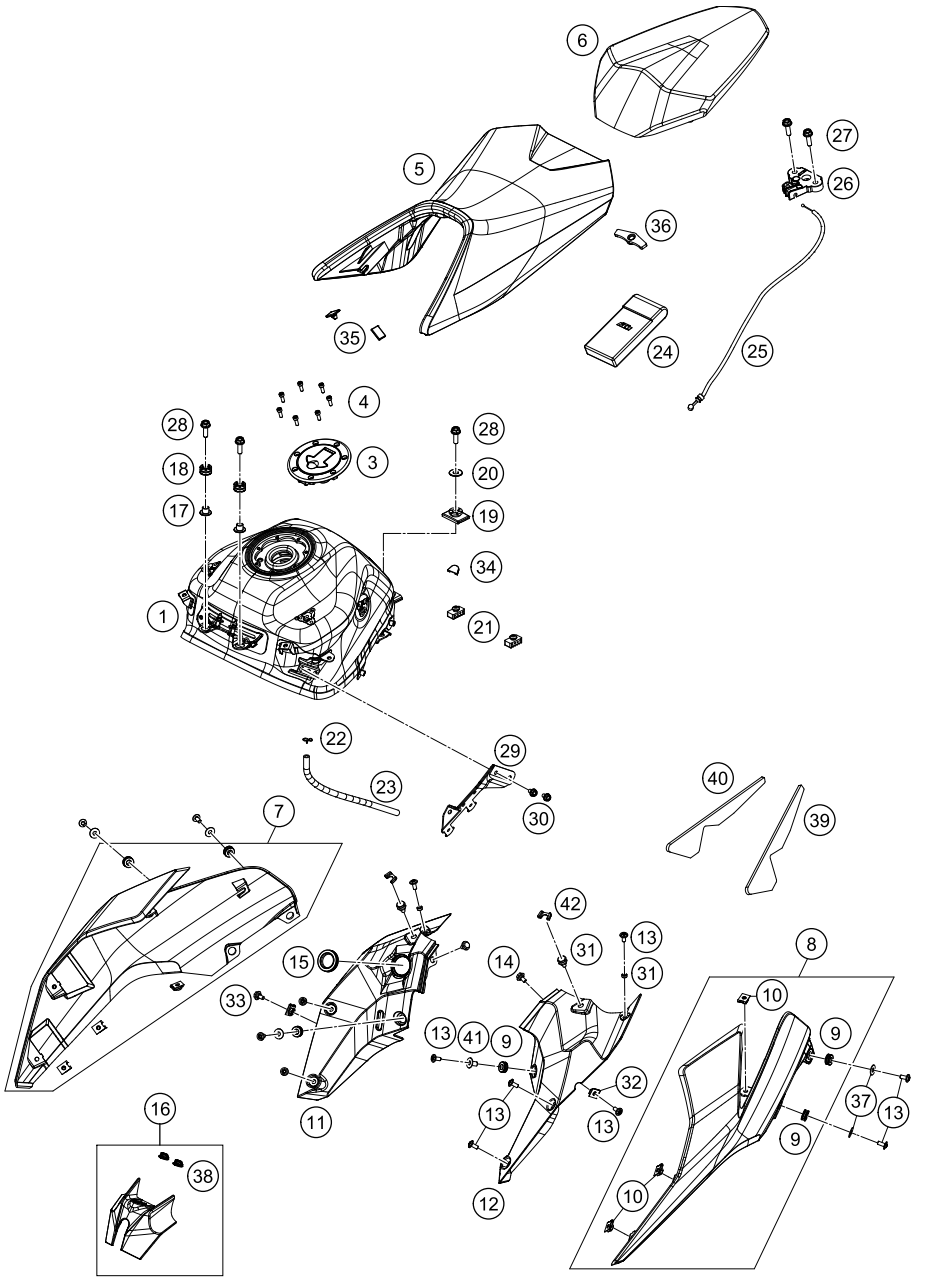

POS	PARTNUMBER	PARTNAME	PIECE
40	93007025010	Tape cover RH	1
41	93014051000	Bundbuchse	2
42	93008065000	Rubber grommet tank spoiler	2

189010710

49989

* NEW PART

X ON DEMAND

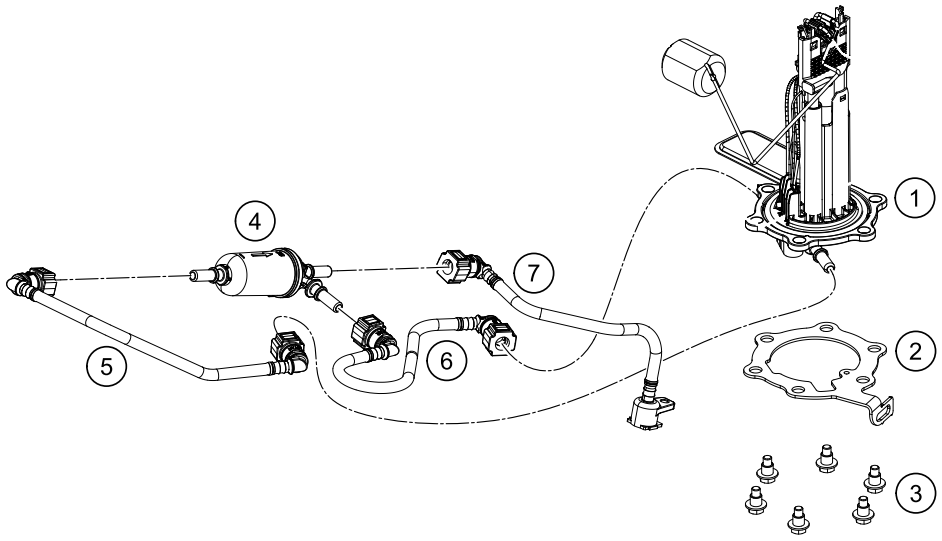

POS	PARTNUMBER	PARTNAME	PIECE
1	93007088000	Fuel pump	1
2	93041007000	Flange for fuel pump	1
3	J025060128	BOLT FLANGE- M6 X 1 X L12.8 XBRT XST	6
4	93807018000	fuel filter	1
5	93007016100	Fuel hose	1
6	93007015000	Fuel hose	1
7	93341013044	Injector upper part with hose complete	1

179010730

44997

* NEW PART

X ON DEMAND

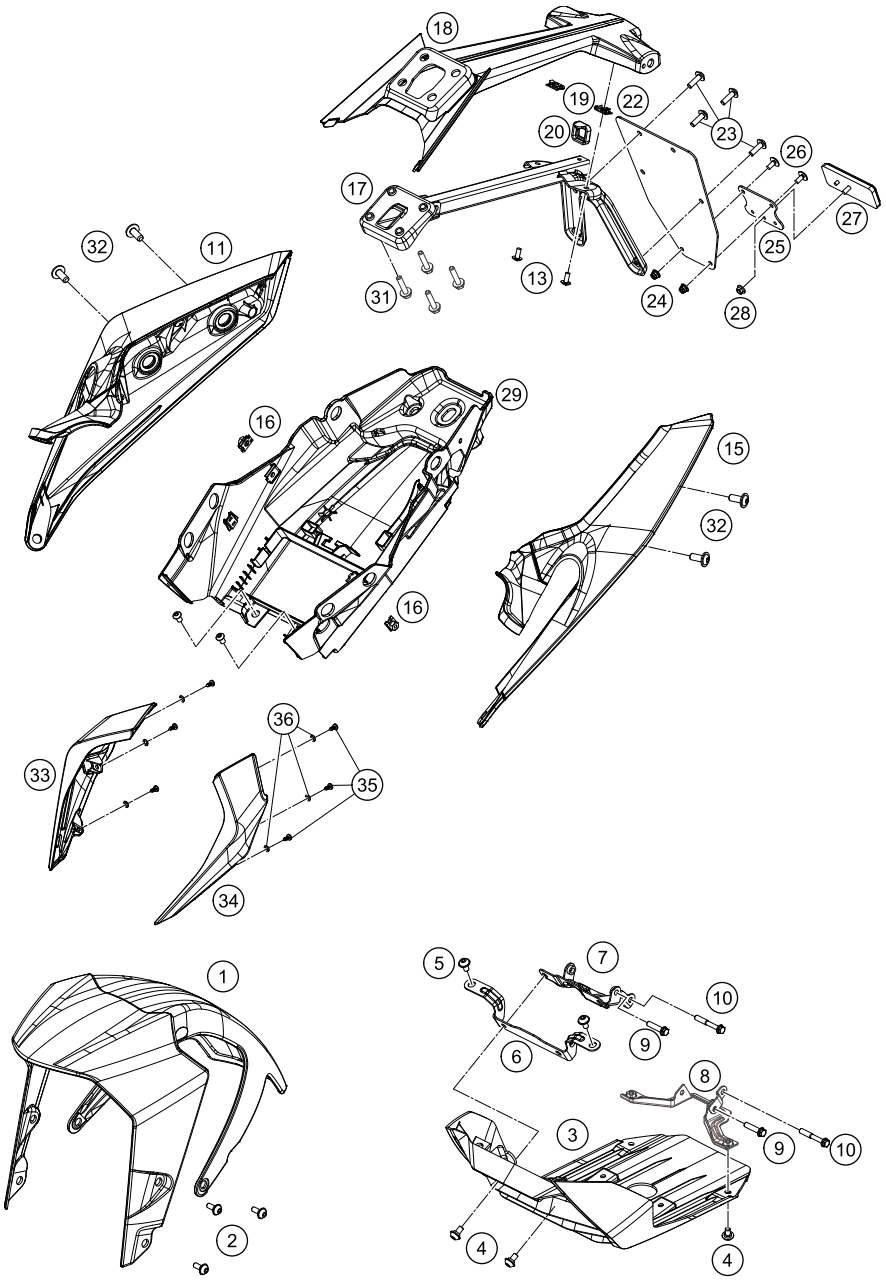

179020810

POS	PARTNUMBER	PARTNAME	PIECE
1	9300801003330	Front fender cpl. black	1
2	J031050161	Panhead screw with shoulder	6
3	93308020000	Under-engine fairing 250/390	1
4	93008020060	Screw M6X1X9	4
5	90508006001	SOCKET HEAD BOLT M6X12	2
6	93008021000	Retaining bracket	1
7	93008021020	Retaining bracket	1
8	93008021120	Bracket belly pan rear	1
9	J025060144	Hexagon srew M6X14	4
10	J025060359	Hexagon screw M6X35	2
11	9300804210028	Side fairing rs cpl. white	1
13	J031050123	Lens head screw M5X12	2
15	9300804110028	Side fairing ls cpl. white	1
16	90108050001	CLIP NUT M5	6
17	93008015000	License plate holder support	1
18	93008015050	License plate holder support cover	1
19	93008083010	Clip Nut M5	2
20	93008015010	Protection rubber	1
22	90808016000	REAR FENDER EXT.	1
23	90508006003	AH SCREW M6X1X20	4
24	90102031010	HEX NUT M5 AF8	2
25	90514044000	REFLECTOR MOUNTING	1
26	J005050123	FLAT HEAD SCREW M6X12 PH	2
27	90514045000	REFLECTOR	1
28	90204060001	HH COLLAR NUT	1
29	93008019000	Tail end lower part	1
31	J025060226	Hex collar screw M6X22	4
32	90508008001	AH SCREW M8X20	4
33	93008001000EB	Side mask rght LED orange	1
34	93008024000EB	Side mark left LED orange	1
35	J981030101	Lens head screw M3,5X10	6
36	J125040003	Washer plain small 4.5X8X0.5XBLK	6

18935

* NEW PART

X ON DEMAND

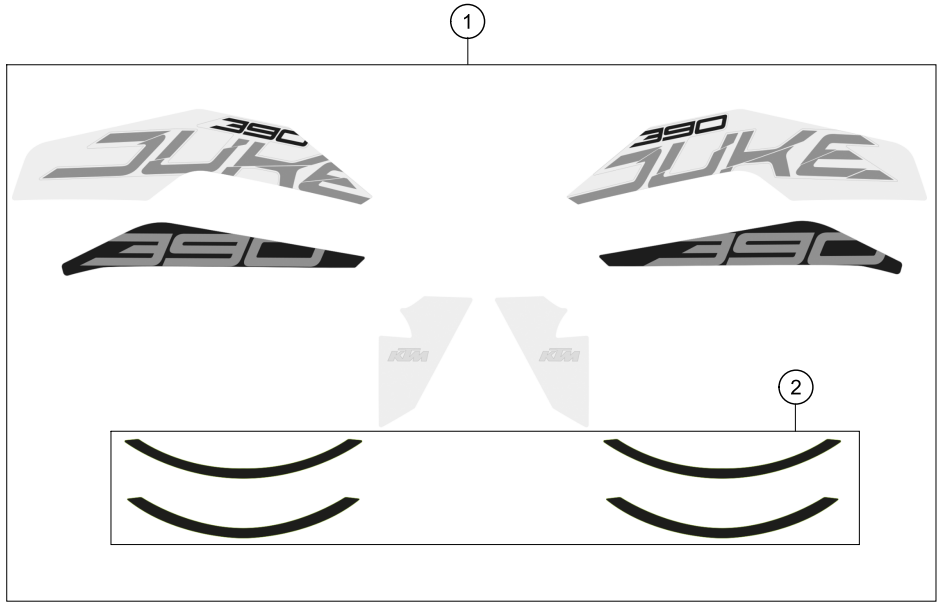

POS	PARTNUMBER	PARTNAME	PIECE
1	90208099200	Decal kit 390 Duke orange	1
2	90208097000	Kit DCL wheel rim D390	x

179020830

18484

* NEW PART

X ON DEMAND

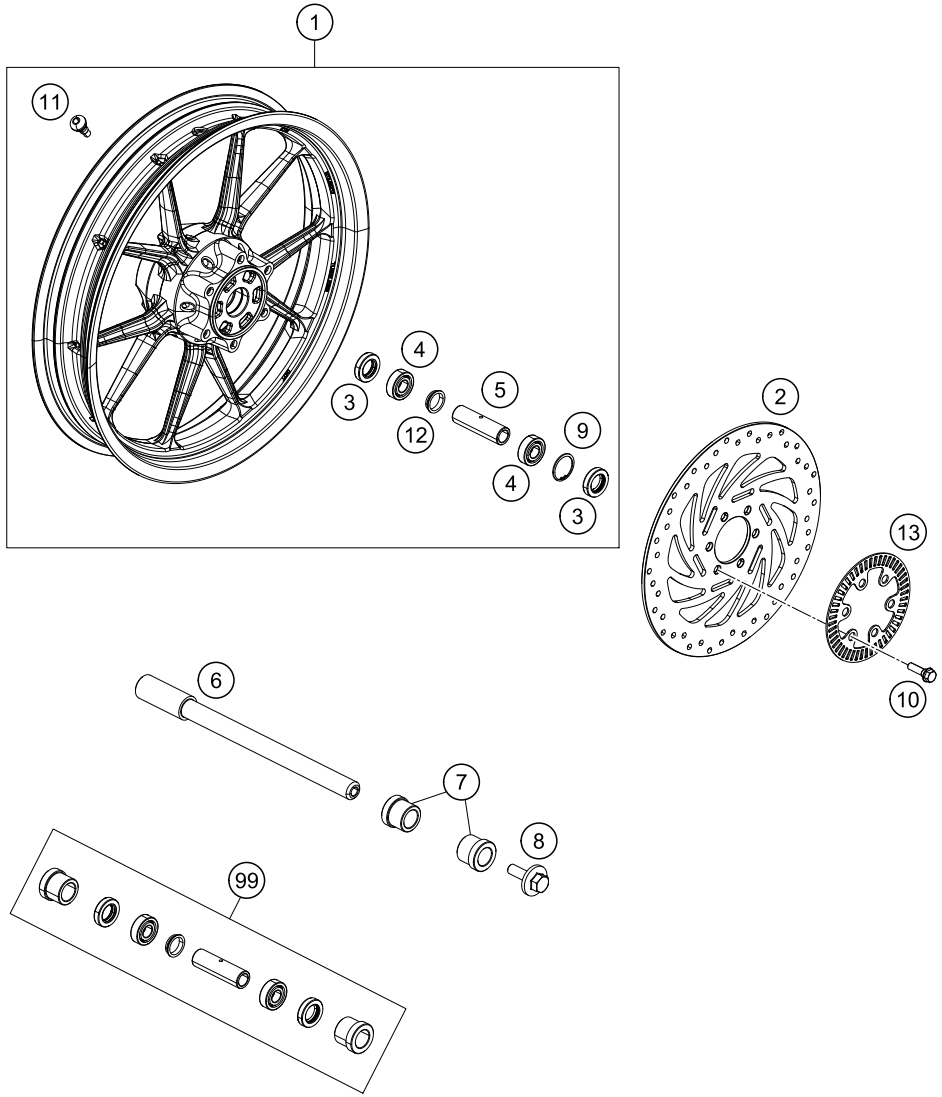

POS	PARTNUMBER	PARTNAME	PIECE
1	93009001044EB	Front wheel cpl. orange	1
2	93309060000	Brake disc front 320MM	1
3	J760223508	SHAFT SEAL RING 22X35X8	2
4	J625062023	BALL BEARING 6202	2
5	90109011000	BEARING SPACER TUBE FRONT	1
6	93009081000	Front wheel spindle	1
7	90209083000	BEARING BUSHING	2
8	90109082000	flanged bolt M8	1
9	J472035150	Circlip 35X1,5	1
10	90110062000	SPECIAL SCREW M8X25 SELF LOCK.	6
11	90109076000	VALVE CPL.	1
12	90109011001	Fixation bearing spacer tube	1
13	93042020000	SENSORRING ABS	1
99	90109015100	FRONT WHEEL REP. KIT	1

179010910

18468

* NEW PART

X ON DEMAND

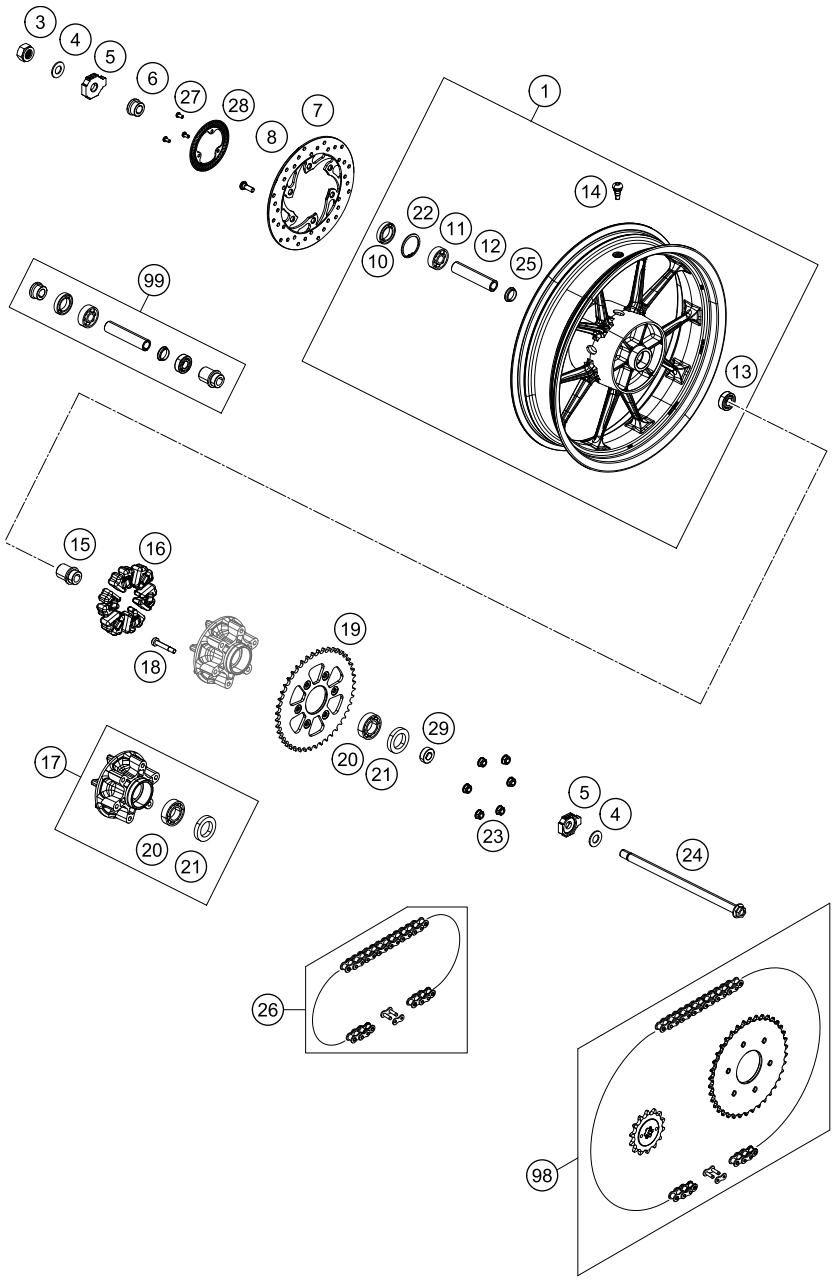

179011010

POS	PARTNUMBER	PARTNAME	PIECE
1	93010001044EB	Rear wheel cpl. orange	1
3	90210086000	wheel spindle nut, rear	1
4	90610087000	washer 15.2x30x2	2
5	90110084000	chain tension adjuster, right	1
6	90110013000	SPACER BUSHING REAR WHEEL R/S	1
7	90110060000	rear brake disk D=230mm	1
8	90110062000	SPECIAL SCREW M8X25 SELF LOCK.	6
10	J760264208	SHAFT SEAL RING 26X42X8	2
11	J625063021	Grooved ball bearing 6302	1
12	90110011000	BEARING SPACER TUBE REAR	1
13	J625062023	BALL BEARING 6202	1
14	90109076000	VALVE CPL.	1
15	90610054000	SPACER BUSHING KRT INSIDE	1
16	90210059100	rear wheel dampening rubber	1
17	90210050000	SPROCKET SUPPORT	1
18	90810052000	SPECIAL SCREW M8X48	6
19	90510051045	rear sprocket 45 teeth	1
20	J625062050	BALL BEARING 6205	1
21	J760295207	SHAFT SEAL RING 29X52X7	1
22	J472042170	CIRCLIP	1
23	90510052000	FLANGED NUT M8X1,25	6
24	90210085000	wheel spindle, rear	1
25	90109011001	Fixation bearing spacer tube	1
26	78010167118	CHAIN DID 118 LINKS	1
27	90142021001	SCREW FOR ABS	3
28	90142021000	SENSOR DISC REAR	1
29	90110053000	SPACER CHAIN WHEEL SUPPORT	1
98	00050002059	DRIVETRAIN KIT 390 DUKE 2015	1
99	90110015100	REAR WHEEL REP. KIT 390 DUKE	1

18819

* NEW PART

X ON DEMAND

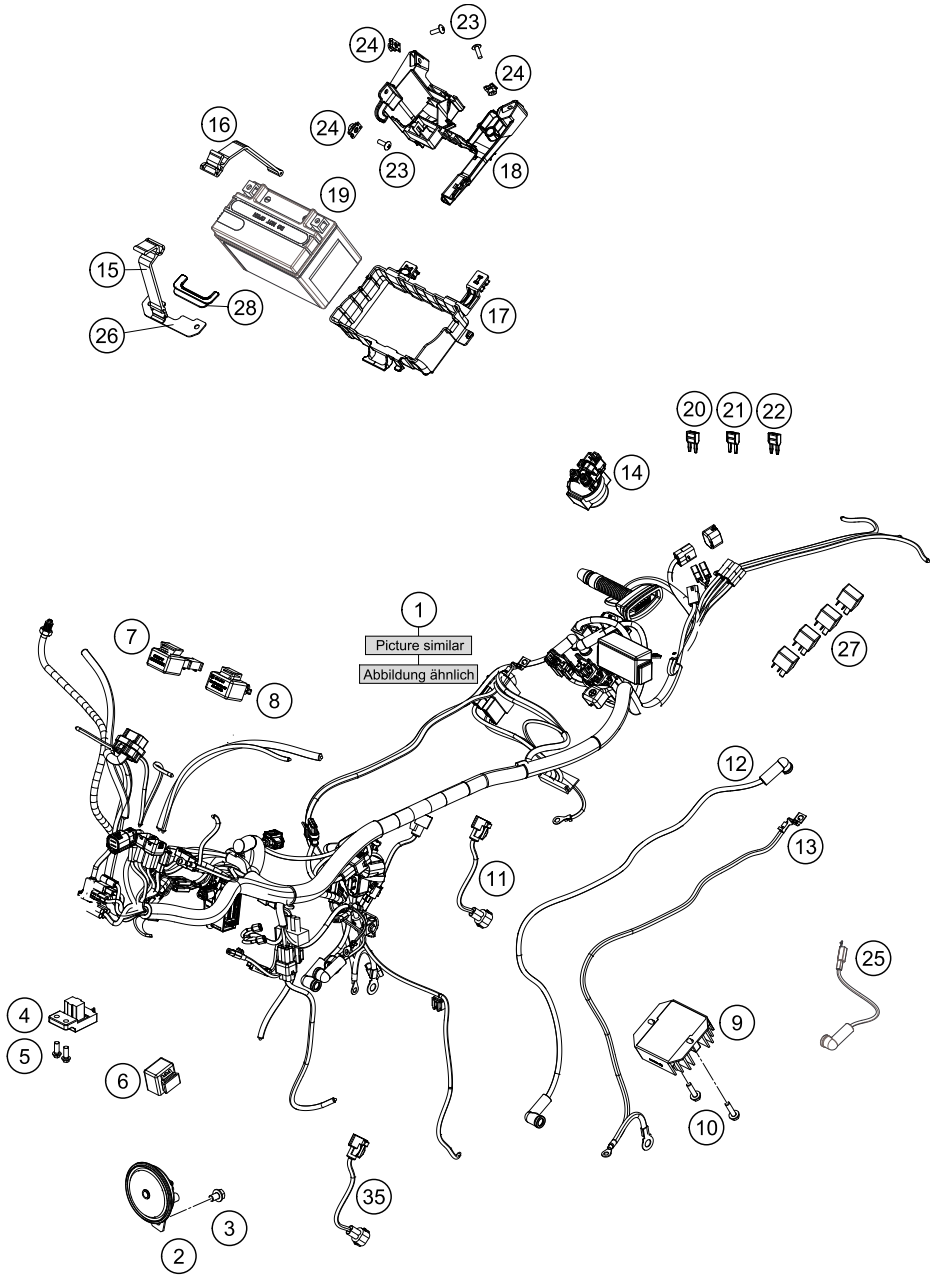

POS	PARTNUMBER	PARTNAME	PIECE
1	93311075000	Main wiring harness	1
2	93011060100	Horn	1
3	J025080123	HH COLLAR SCREW M8X12 SW12	1
4	93541088000	rollover sensor	1
5	J025060169	HH COLLAR SCREW M6X16 SW8	2
6	93811043000	resistor	1
7	93539010000	load resistence	1
8	90511030000	indicator relay	1
9	93011034000	Voltage regulator	1
10	J025060253	HH COLLAR SCREW M6X25 SW10	2
11	93041080050	Cable	1
12	93011059000	Starter cable 6MM	1
13	93011197000	Ground wire	1
14	90111058000	STARTER RELAY	1
15	93011055060	Band batterie	1
16	93011055000	Battery rubber holder	1
17	93011054050	METAMOLL BATTERY	1
18	93008018060	Cross brace cover	1
19	90611053000	BATTERY 12V/8AH	1
20	75011088010	FUSE 10A 07	8
21	75011088015	FUSE 15A 07	3
22	75011088030	FUSE 30A	2
23	J031050163	CHEESE-HEAD SCREW M5X16	3
24	90108050001	CLIP NUT M5	3
25	93038091000	Pigteil oil pressure switch	1
26	93011056100	Bracket battery band	1
27	90611057000	relay (interlock)	4
28	93011026000	Cable protection	1
35	93811580000	Flasher wiring harness USA	1

179021111

45038

* NEW PART

X ON DEMAND

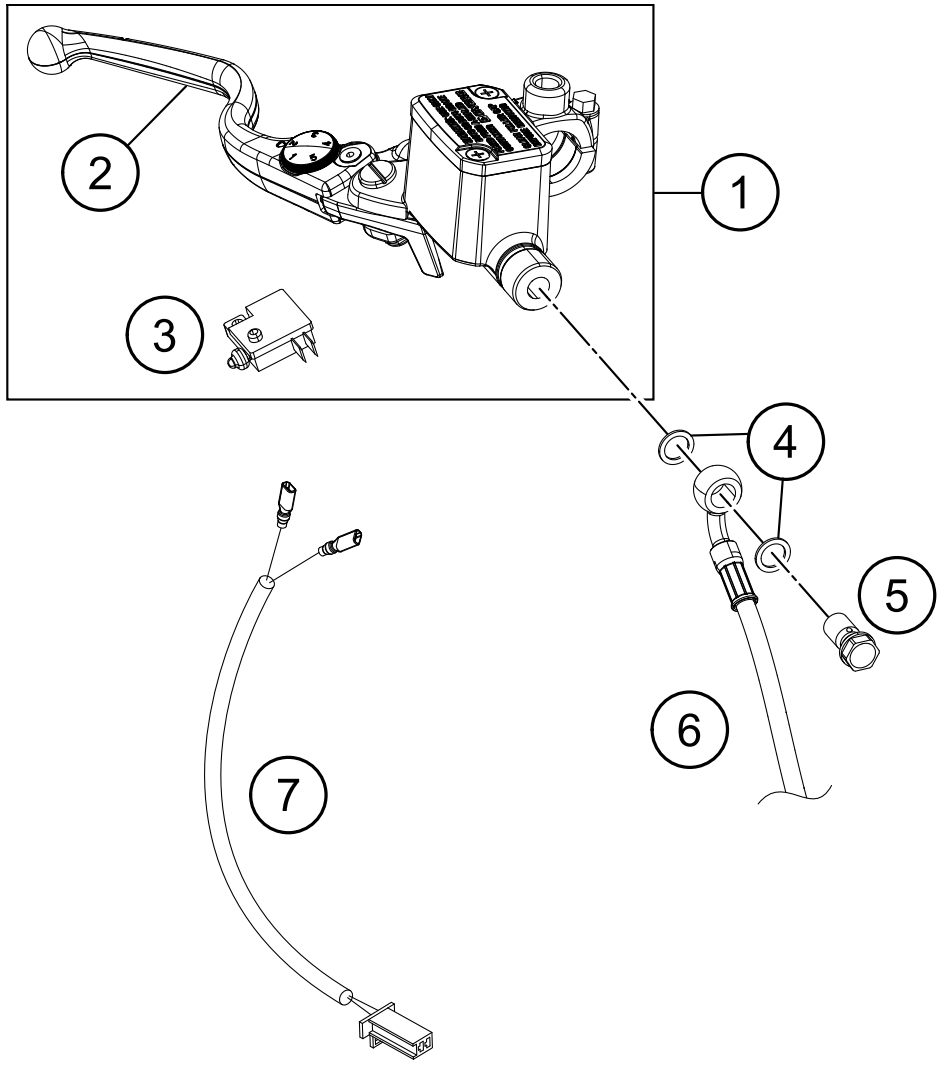

POS	PARTNUMBER	PARTNAME	PIECE
1	93313001033	Handbrake cylinder lever adjustable	1
2	93713002033	Brake lever cpl.	1
3	90111050000	brake light switch, front	1
4	90113026000	COPPER GASKET	2
5	90113013000	BANJO SCREW	1
6	93013035000	Brake hose	1
7	90111050050	WIRE BRAKE LIGHT SWITCH FRONT	1

179021310

49400

* NEW PART

X ON DEMAND

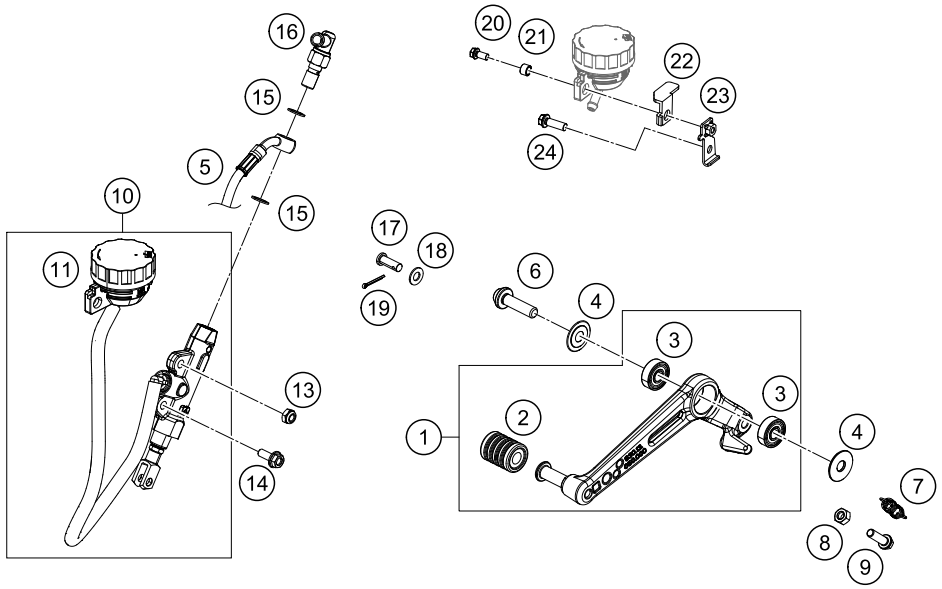

POS	PARTNUMBER	PARTNAME	PIECE
1	93013050033	Footbrake lever complete	1
2	90134035000	GEAR SHIFT LEVER RUBBER	1
3	J625060800	BALL BEARING 608	2
4	90134031020	thrust washer, gear shift lever	2
5	93013037000	Brake hose	1
6	90134034300	BOLT SHIFT LEVER	1
7	90113052000	brake pedal spring	1
8	J934060003	HEXAGON NUT M6	1
9	J025060203	HH COLLAR SCREW M6X20 SW10	1
10	93013060000	Rear master cylinder	1
11	90113009000	BRAKE FLUID RESERVOIR CPL.	1
13	J934060006	Hex nut M6	1
14	90130059000	HH COLLAR SCREW M6X16	1
15	90113026000	COPPER GASKET	2
16	90111051000	brake light switch, rear	1
17	90113057000	pin for fork end	1
18	90103040001	PLAIN WASHER 6,4X12X1	1
19	J094020153	splint pin 2x15mm	1
20	J025060181	Hex collar screw M6X18	1
21	93035065020	Spacer bushing	1
22	93013068010	Bracket, reservoir	1
23	93013068000	Sheet	1
24	J025050103	HH-COLLAR SCREW M5X10	1

179011330

49399

* NEW PART

X ON DEMAND

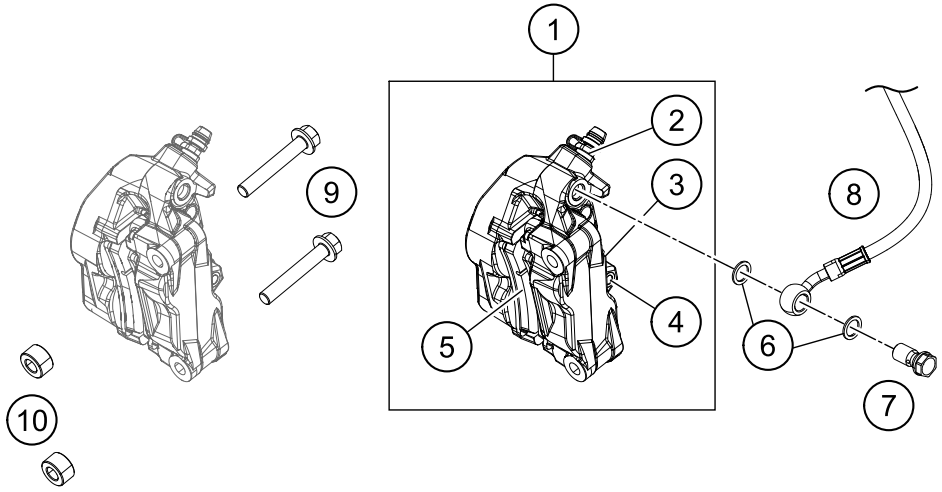

POS	PARTNUMBER	PARTNAME	PIECE
1	93713015000	brake caliper, radial	1
2	90113021000	BLEEDER SCREW	1
3	90113018000	SPRING CLIP	1
4	90113017000	BOLT F. BRAKE PADS	1
5	90813030000	BRAKE PAD FRONT TT2910HH	1
6	90113026000	COPPER GASKET	2
7	90113013000	BANJO SCREW	1
8	93013036000	Brake hose	1
9	J01008060S	HH collar screw M8x1x60	2
10	90613098150	brake caliper spacer sleeve	2

179021360

18470

* NEW PART

X ON DEMAND

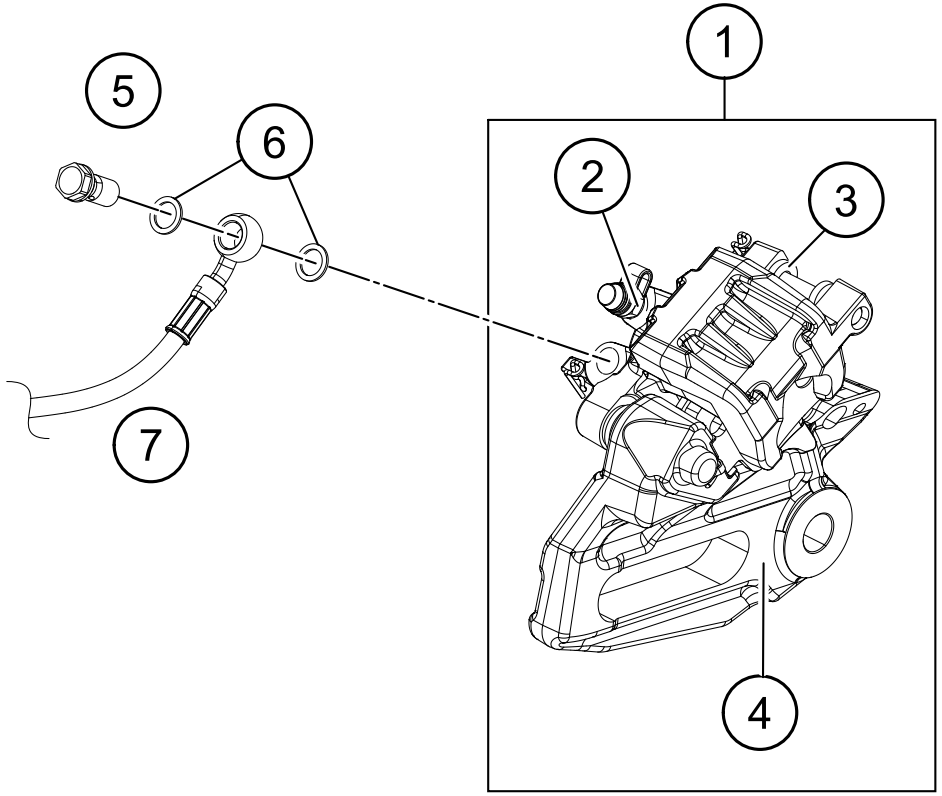

POS	PARTNUMBER	PARTNAME	PIECE
1	90113080000	brake caliper, rear cpl.	1
2	90113121000	BLEEDER SCREW	1
3	90113090000	REAR BRAKE PADS - SET	1
4	90113075000	BRAKE CALIPER SUPPORT REAR	1
5	90113013000	BANJO SCREW	1
6	90113026000	COPPER GASKET	2
7	93013038000	Brake hose	1

179011390

18356

* NEW PART

X ON DEMAND

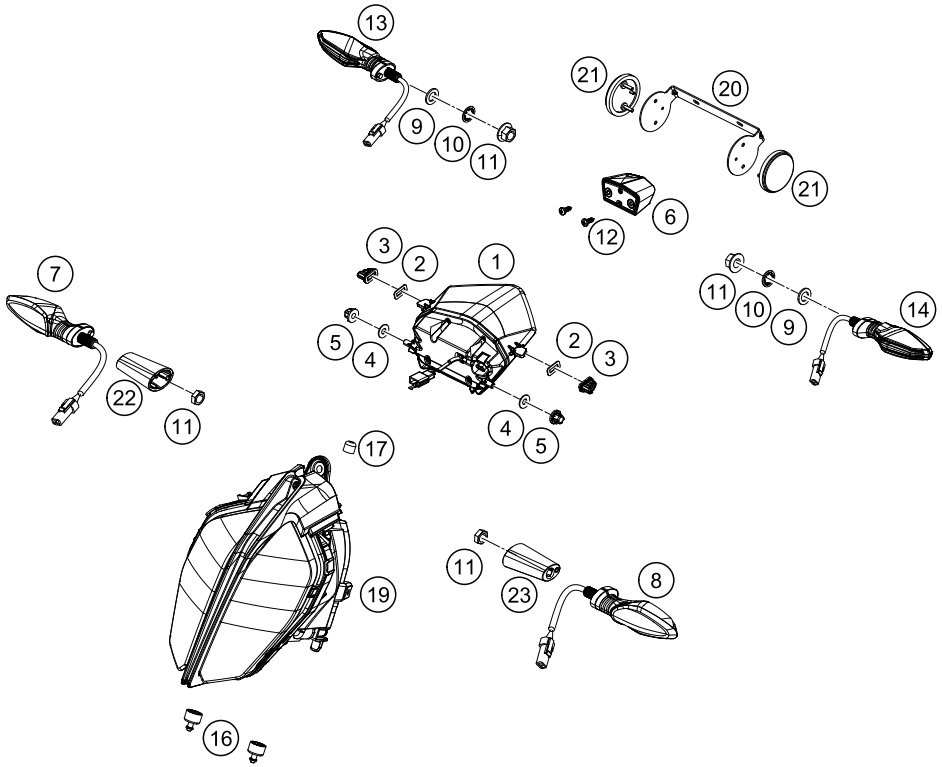

POS	PARTNUMBER	PARTNAME	PIECE
1	93014040100	lamp tail MY17	1
2	93014040040	Washer	2
3	93014040020	Rubber bushing	2
4	93014040030	Washer	2
5	93014040010	Rubber bushing	2
6	90114047000	LICENSE PLATE ILLUMINATION	1
7	93014526000	Right front flasher US	1
8	93014525000	Left front flasher US	1
9	J125100003	WASHER PLAIN 10,5	2
10	J797100003	TOOTHED WASHER M10	2
11	J934100006	Hex nut M10	4
12	J981420133	SHEET MET.SCR. DIN 7981 4,2X13	2
13	90514526044	INDICATOR CPL. RR R/S USA	1
14	90514525044	INDICATOR CPL. RR L/S USA	1
16	93014015000	Rubber bushing	2
17	93014014000	Rubber bushing	1
19	93014001300	Headlight	1
20	90212581000	BRACKET SIDE REFLECTOR REAR	1
21	90212582000	SIDE REFLECTOR REAR	2
22	93014526050	Right flasher adapter US	1
23	93014525050	Left flasher US	1

179011411

50012

* NEW PART

X ON DEMAND

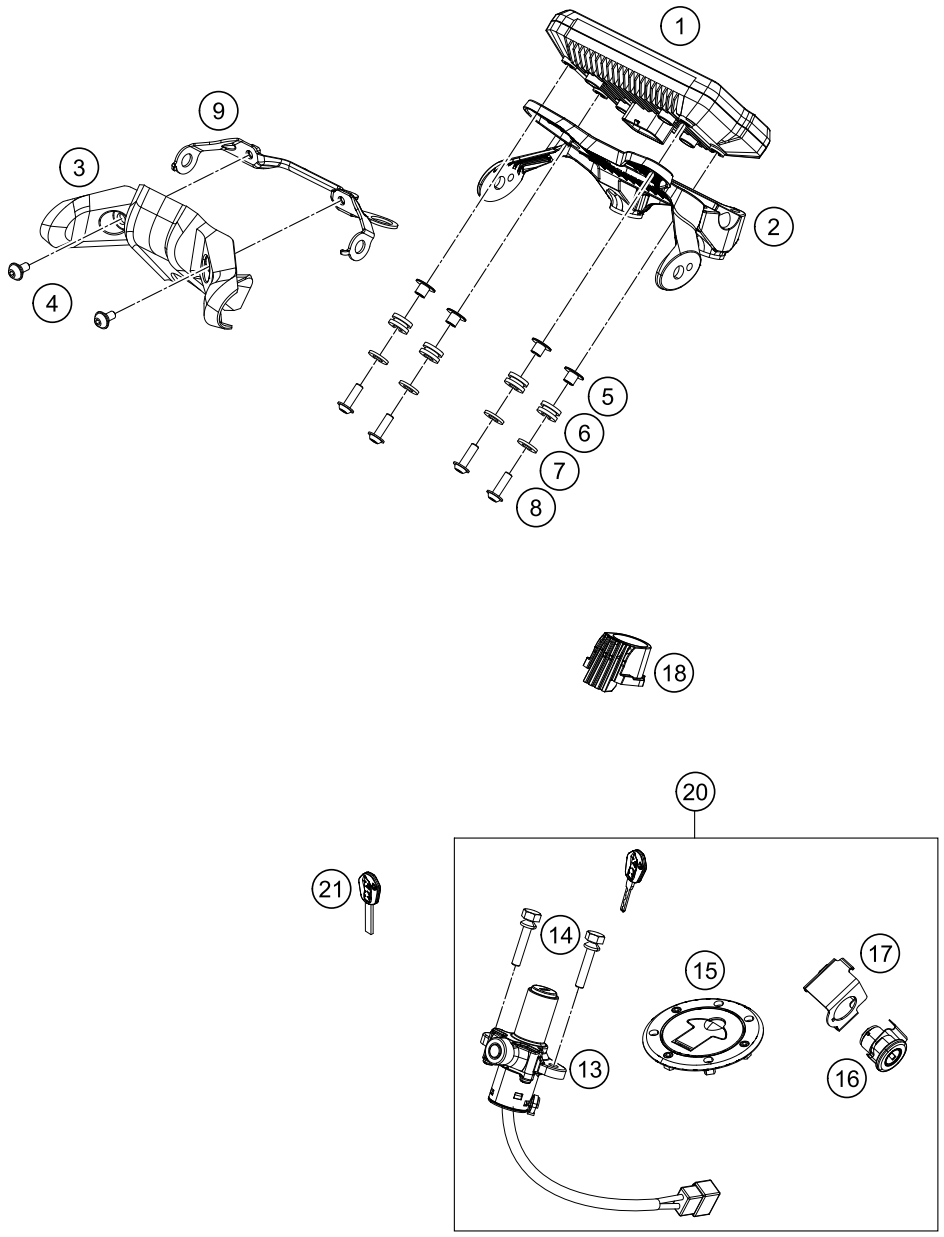

POS	PARTNUMBER	PARTNAME	PIECE
1	93314069000	Speedometer with TFT, CAN, ABS	1
2	93014064000	Holder handsbar CUM TFT speedo	1
3	93014064100	Back cover TFT holder	1
4	93008020060	Screw M6X1X9	2
5	93014062010	Collar TFT speedo small	4
6	90507040001	RUBBER SLEEVE	4
7	93308015010	Washer, license plate holder support	4
8	90508006003	AH SCREW M6X1X20	4
9	93014064200	Retain. brack., bracket, comb. instr.	1
13	93011066044	Ignition lock complete	1
14	93011064100	Special screw for ignition lock	2
15	93807008000	Fuel tank cap	1
16	90107050050	SEAT LOCK	1
17	93007051000	Retaining bracket	1
18	93011066010	Positioning rubber	1
20	90211066144	Lock set cpl.	1
21	90111067100	BLANK KEY 125/200 DUKE	x

189011430

50000

* NEW PART

X ON DEMAND

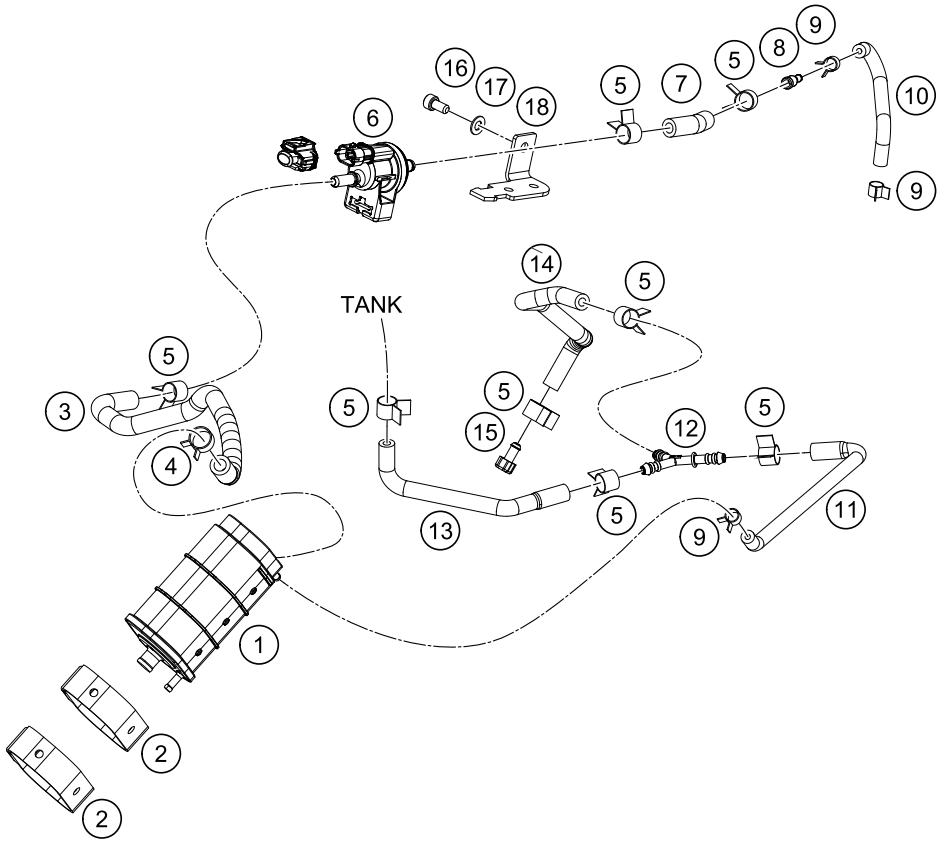

POS	PARTNUMBER	PARTNAME	PIECE
1	93015001000	Activated carbon filter	1
2	93015003000	Rubber band	2
3	93015020000	Hose	1
4	90607017001	SPRING BAND CLAMP 15X10	1
5	90607017003	SPRING BAND CLAMP D13	8
6	90607030000	fuel tank vent valve	1
7	93015021000	Pre-formed hose	1
8	90207016004	CONNECTOR TUBE EVAP	1
9	90607017002	CLAMP D9	3
10	93015022000	Pre-formed hose	1
11	93015017000	Y connection	1
12	90507015000	CONNECTOR Y SHAPE	1
13	93015026000	Pre-formed hose	1
14	90515023000	TUBE CONNECTOR TO PLUG	1
15	90515011000	PLUG FUEL DRAIN	1
16	J912060123	hexagon socket screw M6X12	1
17	J125060006	Washer M6	1
18	93015032000	Fitting panel	1

179021510

18471

* NEW PART

X ON DEMAND

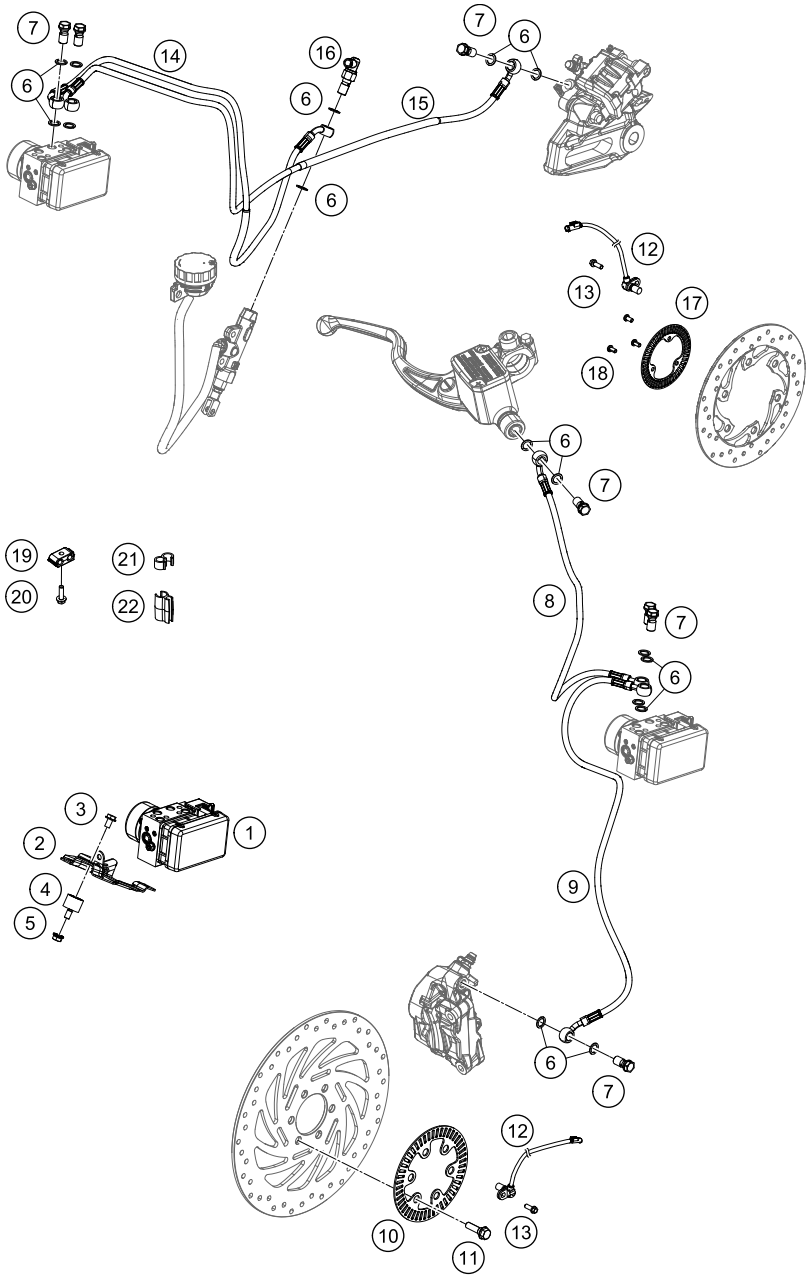

POS	PARTNUMBER	PARTNAME	PIECE
1	93342031044	Unit ABS WET KT22	1
2	93041030020	Retaining bracket	1
3	J026060083	HH COLLAR SCREW M6X8 SW10	3
4	90135001001	silentbloc M6	3
5	J926060000	FLANGED NUT M6 WS10 SELF LOCK.	3
6	90113026000	COPPER GASKET	16
7	90113013000	BANJO SCREW	7
8	93013035000	Brake hose	1
9	93013036000	Brake hose	1
10	93042020000	SENSORRING ABS	1
11	90110062000	SPECIAL SCREW M8X25 SELF LOCK.	6
12	90142125000	ABS SENSOR	2
13	J028060166	BOLT M6X16	2
14	93013037000	Brake hose	1
15	93013038000	Brake hose	1
16	90111051000	brake light switch, rear	1
17	90142021000	SENSOR DISC REAR	1
18	90142021001	SCREW FOR ABS	3
19	93813024000	brake hose clamp	3
20	J025050183	BOLT M5X18	1
21	93813035000	CLAMP SENSOR CABLE	4
22	93813147000	CLAMP FOR BRAKE HOSE	2

179014210

18934

* NEW PART

X ON DEMAND

WWW.KTM.COM

F4375R1EN

Art. Nr.: F4375R1EN 21. Dez 2017

KTM Sportmotorcycle GmbH
5230 Mattighofen, Austria
www.ktm.com

KTM POWERPARTS KTM POWERWEAR KTM ORIGINAL SPARE PARTS